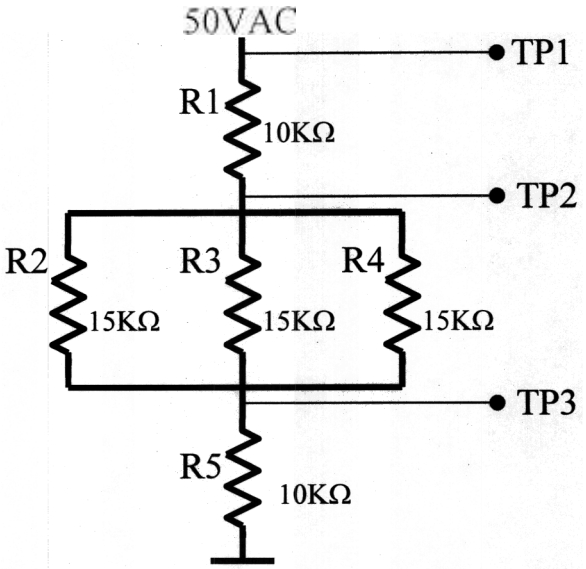


| Test Point | Normal | Malfunction |
|---|---|---|
| TP1 | 50VDC | 50VDC |
| TP2 | 30VDC | 25VDC |
| TP3 | 20VDC | 25VDC |
| Malfunctioning | Component | |

| Test Point | Normal | Malfunction |
|---|---|---|
| TP1 | 50VDC | 50VDC |
| TP2 | 30VDC | 0 VDC |
| TP3 | 20VDC | 0VDC |
| Malfunctioning | Component | |

| Test Point | Normal | Malfunction |
|---|---|---|
| TP1 | 50VDC | 50VDC |
| TP2 | 30VDC | 50VDC |
| TP3 | 20VDC | 50VDC |
| Malfunctioning | Component | |

| Test Point | Normal | Malfunction |
|---|---|---|
| TP1 | 50VDC | 50VDC |
| TP2 | 30VDC | 31.82VDC |
| TP3 | 20VDC | 18.18VDC |
| Malfunctioning | Component | |

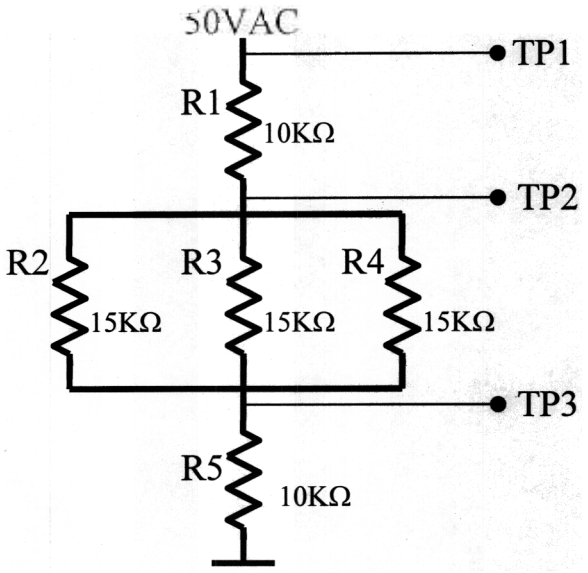


| Test Point | Normal | Malfunction |
|---|---|---|
| TP1 | 50VDC | 50VDC |
| TP2 | 30VDC | 25VDC |
| TP3 | 20VDC | 25VDC |
| Malfunctioning | Component | REQ Short |

| Test Point | Normal | Malfunction |
|---|---|---|
| TP1 | 50VDC | 50VDC |
| TP2 | 30VDC | 0 VDC |
| TP3 | 20VDC | 0VDC |
| Malfunctioning | Component | R1 Open |

| Test Point | Normal | Malfunction |
|---|---|---|
| TP1 | 50VDC | 50VDC |
| TP2 | 30VDC | 50VDC |
| TP3 | 20VDC | 50VDC |
| Malfunctioning | Component | R5 Open |

| Test Point | Normal | Malfunction |
|---|---|---|
| TP1 | 50VDC | 50VDC |
| TP2 | 30VDC | 31.82VDC |
| TP3 | 20VDC | 18.18VDC |
| Malfunctioning | Component | REQ open |