Normal	Reading *******
EA	
REQ	
RT	
IT	
ER1	
EREQ	
ER5	
ETP1	
ETP2	
ETP3	
IR2	
IR3	
IR4	

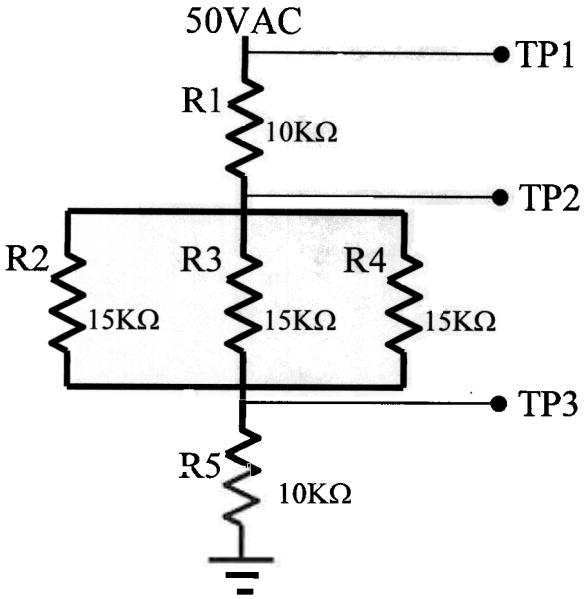

Normal	Reading *******
EA	
REQ	
RT	
IT	
ER1	
EREQ	
ER5	
ETP1	
ETP2	
ETP3	
IR2	
IR3	
IR4	

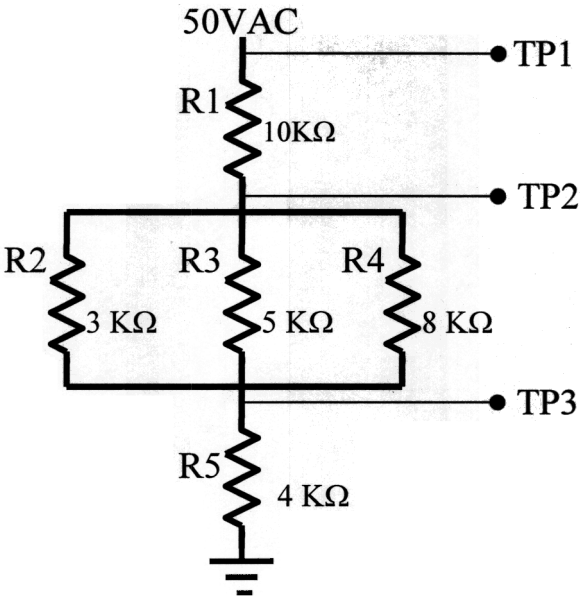

Normal	Reading *******
EA	
REQ	
RT	
IT	
ER1	
EREQ	
ER5	
ETP1	
ETP2	
ETP3	
IR2	
IR3	
IR4	

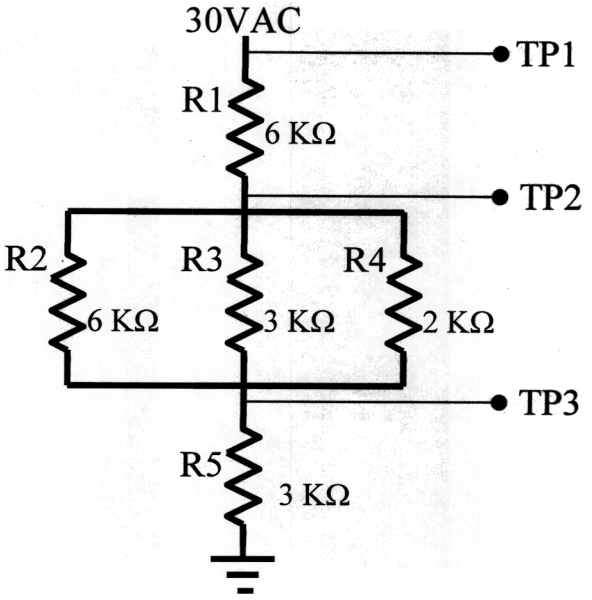

Normal	Reading *******
EA	50 V
REQ	5KΩ
RT	25KΩ
IT	2 mA
ER1	20 V
EREQ	10 V
ER5	20 V
ETP1	50 V
ETP2	30 V
ETP3	20 V
IR2	.66 mA
IR3	.66 mA
IR4	.66 mA

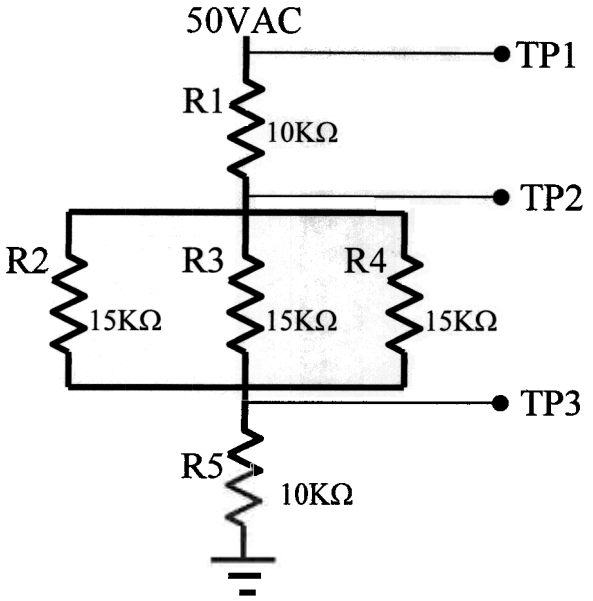

Normal	Reading *******
EA	50 V
REQ	1.5 KΩ
RT	15.5 KΩ
IT	3.226 mA
ER1	32.26 V
EREQ	4.839 V
ER5	12.904 V
ETP1	50 V
ETP2	17.74 V
ETP3	12.091 V
IR2	1.613 mA
IR3	.9678 mA
IR4	.605 mA

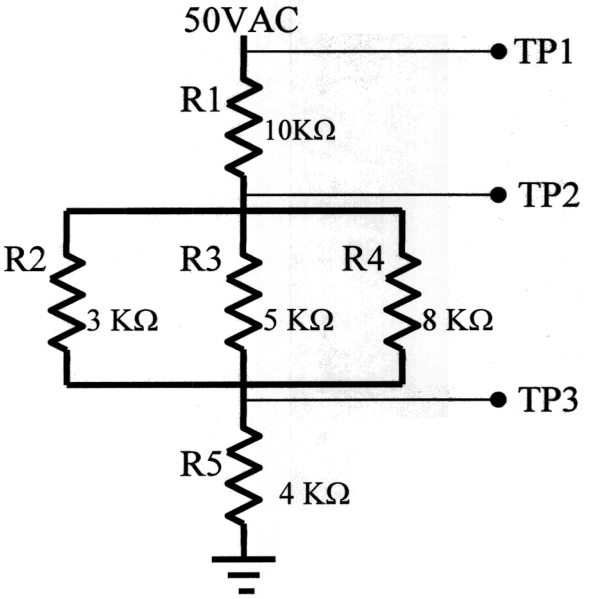
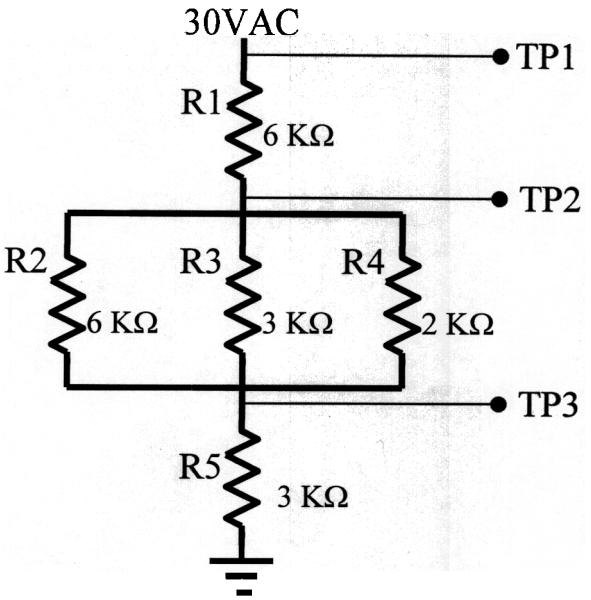
Normal	Reading *******
EA	30 V
REQ	1 KΩ
RT	10 KΩ
IT	3 mA
ER1	18 V
EREQ	3 V
ER5	9 V
ETP1	30 V
ETP2	12 V
ETP3	9 V
IR2	.5 mA
IR3	1 mA
IR4	1.5 mA