NONRESIDENT
TRAINING
COURSE

SEPTEMBER 1998

Navy Electricity and Electronics Training Series

Module 21—Test Methods and Practices

NAVEDTRA 14193

DISTRIBUTION STATEMENT A: Approved for public release; distribution is unlimited.

Although the words “he,” “him,” and “his” are used sparingly in this course to enhance communication, they are not intended to be gender driven or to affront or discriminate against anyone.

DISTRIBUTION STATEMENT A: Approved for public release; distribution is unlimited.

PREFACE

By enrolling in this self-study course, you have demonstrated a desire to improve yourself and the Navy. Remember, however, this self-study course is only one part of the total Navy training program. Practical experience, schools, selected reading, and your desire to succeed are also necessary to successfully round out a fully meaningful training program.

COURSE OVERVIEW: To introduce the student to the subject of Test Methods and Practices who needs such a background in accomplishing daily work and/or in preparing for further study.

THE COURSE: This self-study course is organized into subject matter areas, each containing learning objectives to help you determine what you should learn along with text and illustrations to help you understand the information. The subject matter reflects day-to-day requirements and experiences of personnel in the rating or skill area. It also reflects guidance provided by Enlisted Community Managers (ECMs) and other senior personnel, technical references, instructions, etc., and either the occupational or naval standards, which are listed in the *Manual of Navy Enlisted Manpower Personnel Classifications and Occupational Standards*, NAVPERS 18068.

THE QUESTIONS: The questions that appear in this course are designed to help you understand the material in the text.

VALUE: In completing this course, you will improve your military and professional knowledge. Importantly, it can also help you study for the Navy-wide advancement in rate examination. If you are studying and discover a reference in the text to another publication for further information, look it up.

1998 Edition Prepared by
ETC Richard L. Baker

Published by
NAVAL EDUCATION AND TRAINING
PROFESSIONAL DEVELOPMENT
AND TECHNOLOGY CENTER

NAVSUP Logistics Tracking Number
0504-LP-026-8440

Sailor's Creed

"I am a United States Sailor.

I will support and defend the Constitution of the United States of America and I will obey the orders of those appointed over me.

I represent the fighting spirit of the Navy and those who have gone before me to defend freedom and democracy around the world.

I proudly serve my country's Navy combat team with honor, courage and commitment.

I am committed to excellence and the fair treatment of all."

TABLE OF CONTENTS

CHAPTER **PAGE**

1. Basic Measurements 1-1
2. Component Testing 2-1
3. Quantitative Measurements 3-1
4. Qualitative Measurements 4-1
5. Waveform Interpretation 5-1

APPENDIX

I. Glossary AI-1

INDEX INDEX-1

CREDITS

Many of the figures included in this edition of NEETS, Module 21, *Test Methods and Practices*, were provided by the companies listed below. Permission to use these illustrations is gratefully acknowledged.

SOURCE	FIGURE
Hewlett-Packard Company	2-24, 2-25, 2-27B, 2-28, 2-30, 3-25, 5-30
Huntron Instruments, Inc.	Huntron Tracker
Tektronix, Inc.	5-13, 5-27

NAVY ELECTRICITY AND ELECTRONICS TRAINING SERIES

The Navy Electricity and Electronics Training Series (NEETS) was developed for use by personnel in many electrical- and electronic-related Navy ratings. Written by, and with the advice of, senior technicians in these ratings, this series provides beginners with fundamental electrical and electronic concepts through self-study. The presentation of this series is not oriented to any specific rating structure, but is divided into modules containing related information organized into traditional paths of instruction.

The series is designed to give small amounts of information that can be easily digested before advancing further into the more complex material. For a student just becoming acquainted with electricity or electronics, it is highly recommended that the modules be studied in their suggested sequence. While there is a listing of NEETS by module title, the following brief descriptions give a quick overview of how the individual modules flow together.

Module 1, *Introduction to Matter, Energy, and Direct Current*, introduces the course with a short history of electricity and electronics and proceeds into the characteristics of matter, energy, and direct current (dc). It also describes some of the general safety precautions and first-aid procedures that should be common knowledge for a person working in the field of electricity. Related safety hints are located throughout the rest of the series, as well.

Module 2, *Introduction to Alternating Current and Transformers*, is an introduction to alternating current (ac) and transformers, including basic ac theory and fundamentals of electromagnetism, inductance, capacitance, impedance, and transformers.

Module 3, *Introduction to Circuit Protection, Control, and Measurement*, encompasses circuit breakers, fuses, and current limiters used in circuit protection, as well as the theory and use of meters as electrical measuring devices.

Module 4, *Introduction to Electrical Conductors, Wiring Techniques, and Schematic Reading*, presents conductor usage, insulation used as wire covering, splicing, termination of wiring, soldering, and reading electrical wiring diagrams.

Module 5, *Introduction to Generators and Motors*, is an introduction to generators and motors, and covers the uses of ac and dc generators and motors in the conversion of electrical and mechanical energies.

Module 6, *Introduction to Electronic Emission, Tubes, and Power Supplies*, ties the first five modules together in an introduction to vacuum tubes and vacuum-tube power supplies.

Module 7, *Introduction to Solid-State Devices and Power Supplies*, is similar to module 6, but it is in reference to solid-state devices.

Module 8, *Introduction to Amplifiers*, covers amplifiers.

Module 9, *Introduction to Wave-Generation and Wave-Shaping Circuits*, discusses wave generation and wave-shaping circuits.

Module 10, *Introduction to Wave Propagation, Transmission Lines, and Antennas*, presents the characteristics of wave propagation, transmission lines, and antennas.

Module 11, *Microwave Principles,* explains microwave oscillators, amplifiers, and waveguides.

Module 12, *Modulation Principles,* discusses the principles of modulation.

Module 13, *Introduction to Number Systems and Logic Circuits,* presents the fundamental concepts of number systems, Boolean algebra, and logic circuits, all of which pertain to digital computers.

Module 14, *Introduction to Microelectronics,* covers microelectronics technology and miniature and microminiature circuit repair.

Module 15, *Principles of Synchros, Servos, and Gyros,* provides the basic principles, operations, functions, and applications of synchro, servo, and gyro mechanisms.

Module 16, *Introduction to Test Equipment,* is an introduction to some of the more commonly used test equipments and their applications.

Module 17, *Radio-Frequency Communications Principles,* presents the fundamentals of a radio-frequency communications system.

Module 18, *Radar Principles,* covers the fundamentals of a radar system.

Module 19, *The Technician's Handbook,* is a handy reference of commonly used general information, such as electrical and electronic formulas, color coding, and naval supply system data.

Module 20, *Master Glossary,* is the glossary of terms for the series.

Module 21, *Test Methods and Practices,* describes basic test methods and practices.

Module 22, *Introduction to Digital Computers,* is an introduction to digital computers.

Module 23, *Magnetic Recording,* is an introduction to the use and maintenance of magnetic recorders and the concepts of recording on magnetic tape and disks.

Module 24, *Introduction to Fiber Optics,* is an introduction to fiber optics.

Embedded questions are inserted throughout each module, except for modules 19 and 20, which are reference books. If you have any difficulty in answering any of the questions, restudy the applicable section.

Although an attempt has been made to use simple language, various technical words and phrases have necessarily been included. Specific terms are defined in Module 20, *Master Glossary*.

Considerable emphasis has been placed on illustrations to provide a maximum amount of information. In some instances, a knowledge of basic algebra may be required.

Assignments are provided for each module, with the exceptions of Module 19, *The Technician's Handbook*; and Module 20, *Master Glossary*. Course descriptions and ordering information are in NAVEDTRA 12061, *Catalog of Nonresident Training Courses*.

Throughout the text of this course and while using technical manuals associated with the equipment you will be working on, you will find the below notations at the end of some paragraphs. The notations are used to emphasize that safety hazards exist and care must be taken or observed.

WARNING

AN OPERATING PROCEDURE, PRACTICE, OR CONDITION, ETC., WHICH MAY RESULT IN INJURY OR DEATH IF NOT CAREFULLY OBSERVED OR FOLLOWED.

CAUTION

AN OPERATING PROCEDURE, PRACTICE, OR CONDITION, ETC., WHICH MAY RESULT IN DAMAGE TO EQUIPMENT IF NOT CAREFULLY OBSERVED OR FOLLOWED.

NOTE

An operating procedure, practice, or condition, etc., which is essential to emphasize.

INSTRUCTIONS FOR TAKING THE COURSE

ASSIGNMENTS

The text pages that you are to study are listed at the beginning of each assignment. Study these pages carefully before attempting to answer the questions. Pay close attention to tables and illustrations and read the learning objectives. The learning objectives state what you should be able to do after studying the material. Answering the questions correctly helps you accomplish the objectives.

SELECTING YOUR ANSWERS

Read each question carefully, then select the BEST answer. You may refer freely to the text. The answers must be the result of your own work and decisions. You are prohibited from referring to or copying the answers of others and from giving answers to anyone else taking the course.

SUBMITTING YOUR ASSIGNMENTS

To have your assignments graded, you must be enrolled in the course with the Nonresident Training Course Administration Branch at the Naval Education and Training Professional Development and Technology Center (NETPDTC). Following enrollment, there are two ways of having your assignments graded: (1) use the Internet to submit your assignments as you complete them, or (2) send all the assignments at one time by mail to NETPDTC.

Grading on the Internet: Advantages to Internet grading are:

- you may submit your answers as soon as you complete an assignment, and
- you get your results faster; usually by the next working day (approximately 24 hours).

In addition to receiving grade results for each assignment, you will receive course completion confirmation once you have completed all the assignments. To submit your assignment answers via the Internet, go to:

http://courses.cnet.navy.mil

Grading by Mail: When you submit answer sheets by mail, send all of your assignments at one time. Do NOT submit individual answer sheets for grading. Mail all of your assignments in an envelope, which you either provide yourself or obtain from your nearest Educational Services Officer (ESO). Submit answer sheets to:

COMMANDING OFFICER
NETPDTC N331
6490 SAUFLEY FIELD ROAD
PENSACOLA FL 32559-5000

Answer Sheets: All courses include one "scannable" answer sheet for each assignment. These answer sheets are preprinted with your SSN, name, assignment number, and course number. Explanations for completing the answer sheets are on the answer sheet.

Do not use answer sheet reproductions: Use only the original answer sheets that we provide—reproductions will not work with our scanning equipment and cannot be processed.

Follow the instructions for marking your answers on the answer sheet. Be sure that blocks 1, 2, and 3 are filled in correctly. This information is necessary for your course to be properly processed and for you to receive credit for your work.

COMPLETION TIME

Courses must be completed within 12 months from the date of enrollment. This includes time required to resubmit failed assignments.

PASS/FAIL ASSIGNMENT PROCEDURES

If your overall course score is 3.2 or higher, you will pass the course and will not be required to resubmit assignments. Once your assignments have been graded you will receive course completion confirmation.

If you receive less than a 3.2 on any assignment and your overall course score is below 3.2, you will be given the opportunity to resubmit failed assignments. **You may resubmit failed assignments only once.** Internet students will receive notification when they have failed an assignment--they may then resubmit failed assignments on the web site. Internet students may view and print results for failed assignments from the web site. Students who submit by mail will receive a failing result letter and a new answer sheet for resubmission of each failed assignment.

COMPLETION CONFIRMATION

After successfully completing this course, you will receive a letter of completion.

ERRATA

Errata are used to correct minor errors or delete obsolete information in a course. Errata may also be used to provide instructions to the student. If a course has an errata, it will be included as the first page(s) after the front cover. Errata for all courses can be accessed and viewed/downloaded at:

http://www.advancement.cnet.navy.mil

STUDENT FEEDBACK QUESTIONS

We value your suggestions, questions, and criticisms on our courses. If you would like to communicate with us regarding this course, we encourage you, if possible, to use e-mail. If you write or fax, please use a copy of the Student Comment form that follows this page.

For subject matter questions:

E-mail: n315.products@cnet.navy.mil
Phone: Comm: (850) 452-1001, ext. 1728
DSN: 922-1001, ext. 1728
FAX: (850) 452-1370
(Do not fax answer sheets.)
Address: COMMANDING OFFICER
NETPDTC N315
6490 SAUFLEY FIELD ROAD
PENSACOLA FL 32509-5237

For enrollment, shipping, grading, or completion letter questions

E-mail: fleetservices@cnet.navy.mil
Phone: Toll Free: 877-264-8583
Comm: (850) 452-1511/1181/1859
DSN: 922-1511/1181/1859
FAX: (850) 452-1370
(Do not fax answer sheets.)
Address: COMMANDING OFFICER
NETPDTC N331
6490 SAUFLEY FIELD ROAD
PENSACOLA FL 32559-5000

NAVAL RESERVE RETIREMENT CREDIT

If you are a member of the Naval Reserve, you will receive retirement points if you are authorized to receive them under current directives governing retirement of Naval Reserve personnel. For Naval Reserve retirement, this course is evaluated at 9 points. (Refer to *Administrative Procedures for Naval Reservists on Inactive Duty*, BUPERSINST 1001.39, for more information about retirement points.)

THIS PAGE LEFT BLANK INTENTIONALLY.

Student Comments

Course Title: *NEETS Module 21*
Test Methods and Practices

NAVEDTRA: 14193 **Date**: _____

We need some information about you:

Rate/Rank and Name: _____ SSN: _____ Command/Unit _____

Street Address: _____ City: _____ State/FPO: _____ Zip _____

Your comments, suggestions, etc.:

Privacy Act Statement: Under authority of Title 5, USC 301, information regarding your military status is requested in processing your comments and in preparing a reply. This information will not be divulged without written authorization to anyone other than those within DOD for official use in determining performance.

NETPDTC 1550/41 (Rev 4-00)

CHAPTER 1

BASIC MEASUREMENTS

LEARNING OBJECTIVES

Learning objectives are stated at the beginning of each chapter. These learning objectives serve as a preview of the information you are expected to learn in the chapter. The comprehensive check questions and answers are based on the objectives and enable you to check your progress through the reading assignments. By successfully completing the OCC/ECC, you demonstrate that you have met the objectives and have learned the information. The learning objectives for this chapter are listed below.

Upon completion of this chapter, you will be able to do the following:

1. Explain the importance of performing basic electronic measurements.
2. Explain the importance of voltage measurements in troubleshooting.
3. Identify the various methods of performing voltage measurements.
4. Identify the various methods of performing current measurements.
5. Identify the various methods of performing resistance measurements.
6. Identify the various methods of performing capacitance measurements.
7. Identify the various methods of measuring inductance.

INTRODUCTION TO MEASUREMENTS

In today's modern Navy, a large part of a ship's, submarine's, or aircraft's ability to complete its mission depends on the efficiency of sophisticated electronic systems. As the technician responsible for these systems, you are the focal point in ensuring their reliability. In the event of a system failure, it is your responsibility to repair the system and to do so in a timely manner. Whether you are troubleshooting a faulty system or performing preventive maintenance, you are required to perform basic electronic measurements on a regular basis. This chapter will acquaint you with various alternative methods of performing measurements and discuss the relative merits and demerits of each method.

No discussion of electronic test equipment or electronic measurements would be complete without mentioning the Navy's Metrology Calibration (METCAL) program. Figure 1-1 shows the METCAL structure. Basically, the METCAL program is an elaborate quality control system designed to compare your electronic test equipment with test equipment of much greater accuracy. When you submit your piece of test equipment for calibration, it is compared with the calibration laboratory's equipment (referred to as STANDARDS), which are generally at least four times more accurate than yours. If your equipment does not meet specifications, it is either repaired, adjusted, or rejected with an explanation of why the calibration laboratory was unable to calibrate it. The accuracy of equipment at your local calibration laboratory is ensured by calibration of the test equipment to the standards of the next higher echelon calibration laboratory. The accuracies of test equipment at each higher echelon is increased by a ratio of approximately 4 to 1.

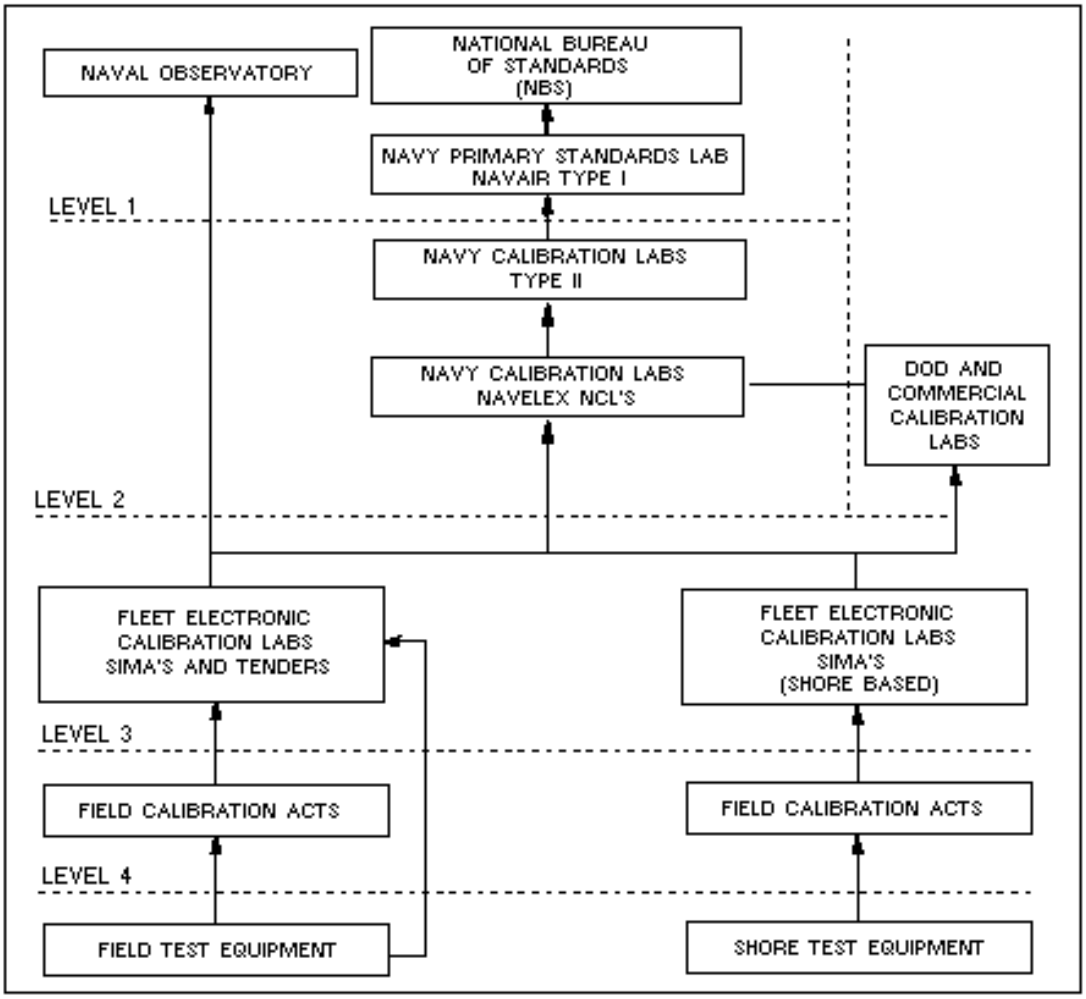

Figure 1-1.—Calibration laboratory structure.

METCAL provides assurance that your test equipment is in top-notch shape. Remember, your measurements are only as accurate as your test equipment; be fully aware of the limitations of your test equipment and never use equipment that isn't properly calibrated when performing measurements or adjustments.

Q-1. What assures the accuracy of your electronic test equipment?

Now that we have discussed the advantages of calibrated test equipment, let's review the reason for all this concern. The fundamental electrical quantities of a circuit are voltage and current and are dependent on the circuit characteristics of resistance, capacitance, and inductance. In addition to these three individual characteristics, don't forget that many electronic components exhibit more than one circuit characteristic at the same time. An example would be a piece of coaxial cable that is engineered by its manufacturer to meet characteristic specifications for impedance, capacitance, and inductance. But let's keep it simple and begin by covering voltage measurements.

Operation and use of common test equipment was covered in NEETS Module 16, *Introduction to Test Equipment*, NAVEDTRA B72-16-00-95. It is recommended that you review this module before continuing.

VOLTAGE MEASUREMENTS

Most Navy technical manuals provide voltage charts that list correct voltages at all primary test points in a piece of equipment. Voltage measurements, when compared with these charts, provide a valuable aid in locating troubles quickly and easily. However, if the sensitivity of the test equipment differs from that of the test equipment used in preparing the chart, the voltage measurements may not reflect true circuit conditions. You must keep in mind that a voltmeter with low sensitivity used on a low range may disturb circuits under test or provide a false indication. Most technical manuals will tell you what type and model of test equipment was used to prepare the voltage charts. As a rule of thumb, the input impedance of the voltmeter should exceed the impedance of the circuit by a ratio of at least 10 to 1. Technicians have spent uncounted hours of wasted time because they have selected improper test equipment.

Q-2. The input impedance of your test equipment should exceed the impedance of the circuit under test by what ratio?

DC VOLTAGE MEASUREMENTS

Direct current voltage may be steady, pulsating, or have ac superimposed on it. The average value of a dc waveform depends on the symmetry of the wave and other aspects of the wave shape. It can vary from 63.6% of peak value for a rectified full sine wave to 50% of peak value for a triangular wave. For a superimposed sine wave, the average value can be zero. Regardless of whether the dc is steady, pulsating, or the ac is superimposed on the dc, a rectifier form of measuring device will indicate its *average value*.

Voltages are usually measured by placing the measuring device in parallel with the component or circuit (load) to be measured. The measuring device should have an infinite internal resistance (input impedance) so that it will absorb *no* energy from the circuit under test and, therefore, measure the true voltage. The accuracy of the voltage measurement depends on the total resistance of the measuring device compared to the load being measured. When the input impedance of the measuring device is 10 times greater than the load being measured, the error usually can be tolerated. If this error cannot be tolerated, a high input impedance measuring device, such as a vacuum tube voltmeter (vtvm), should be used. Alternatively, using two voltmeters in series increases the voltage range and, because of the increase in total voltmeter resistance, provides a more accurate measurement of voltage across the load. If the voltage to be measured is sufficiently high, more than two similar voltmeters can be connected in series across the load to provide greater accuracy; the total voltage measurement is the sum of the individual meter indications.

Q-3. What are the advantages of using two voltmeters in series?

Multimeter Method

A common piece of test equipment used in the Navy is the Simpson 260 analog multimeter, as shown in figure 1-2. It is capable of measuring both ac and dc voltages of up to 5,000 volts.

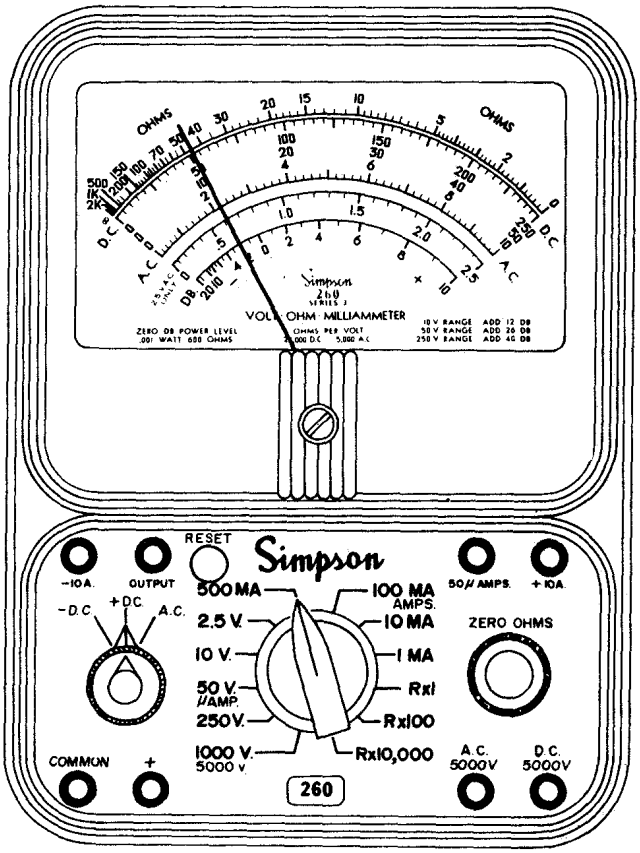

Figure 1-2.—Simpson 260 multimeter.

Two obvious advantages of the Simpson 260 are its portability and ease of operation. Among its disadvantages are its low input impedance and the inherent low accuracy associated with D'Arsonval meter movements, which are used in the meter. When performing measurements with any analog multimeter, remember that the most accurate readings are taken with the pointer midscale. You should also be aware of inaccuracies introduced as a result of parallax. PARALLAX is defined as the apparent displacement of the position of an object because of the difference between two points of view. In the case of meters, this means the position of a meter's pointer will appear to be at different positions on the scale depending on the angle from which the meter is viewed. Some of the Simpson 260 and 270 series multimeters have effectively eliminated the problem of parallax by incorporating a mirror on the scale that accurately reflects the position of the pointer of the meter movement.

Q-4. At what point on a meter movement are the most accurate readings taken?

Oscilloscope Method

A dc voltage measurement can be made with an oscilloscope, as shown in figure 1-3, that has a direct-coupled deflection amplifier or terminals for connection directly to the deflection plates of the cathode-ray tube. Measuring a dc voltage with an oscilloscope is convenient only under certain circumstances; for example, when other measurements are being made on the same equipment with the oscilloscope or when a vacuum tube voltmeter is not available and a high-impedance measuring device is required.

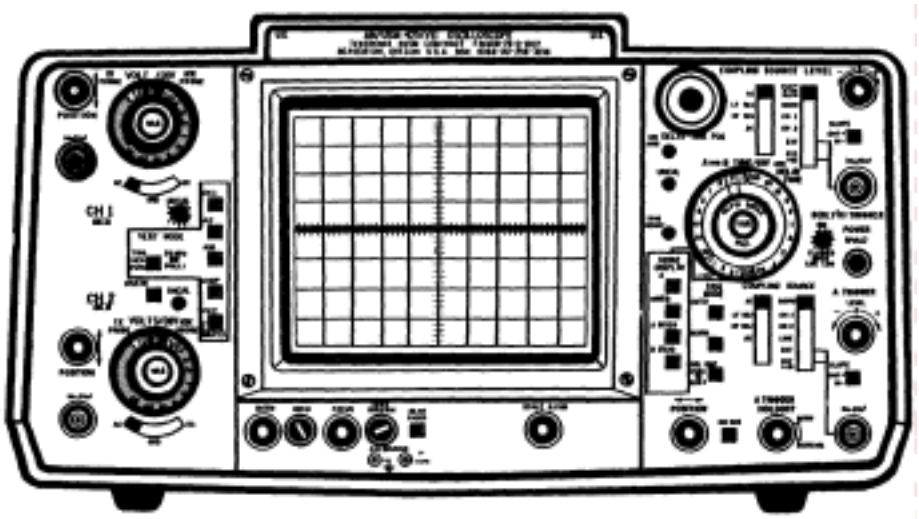

Figure 1-3.—Dual-trace oscilloscope.

Oscilloscopes have a high input impedance and normally will not load down the circuit under test. However, oscilloscopes are primarily designed for waveform observation and are typically less accurate than other pieces of test equipment used to measure dc voltages. A distinct advantage of the oscilloscope is its ability to monitor the level of ac ripple voltage riding the dc voltage. This feature makes the oscilloscope an indispensable aid in troubleshooting dc power supplies with excessive ripple caused by component failure.

Digital Multimeter Method

Most analog voltmeters (that use D'Arsonval meter movements) in common use today are accurate to approximately ±2% of full-scale reading. Most digital multimeters, as shown in figure 1-4, have a high input impedance and are not likely to disturb the circuit being tested. The digital multimeter in most cases provides an accuracy of at least ±0.1%.

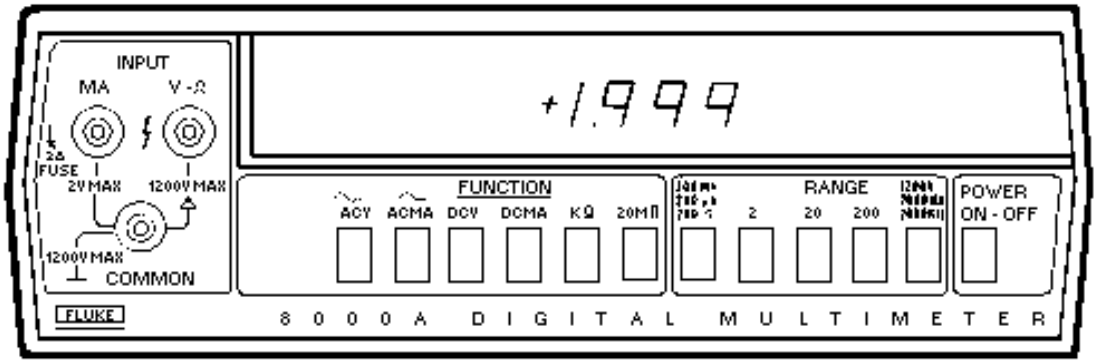

Figure 1-4.—Digital multimeter.

Digital multimeters display the reading numerically. These direct-reading displays, along with automatic range- and polarity-changing features, eliminate the problem of parallax, reduce error and tedium, and increase measurement speed. Data from these meters in digital format can also be processed

by computers, printers, tape and card punches, and magnetic-tape equipment. Digital multimeters are typically compact and lightweight; many come with rechargeable batteries, making them ideal for portable field use. The disadvantages are that they are not rugged and will not tolerate abuse and that some models do not produce sufficient bias voltage to test a diode or transistor junction. The John Fluke Model 77 A/N digital multimeter is presently being purchased by the Navy and will eventually phase out the older and less accurate analog meters.

Differential Voltmeter Method

Using the differential voltmeter, as shown in figure 1-5, provides one of the most accurate methods of measuring dc voltage. Typical accuracies attained by this method are ±0.005%. These extremely high accuracies are achieved by the design of the voltmeter with precision internal reference voltages and precision resistors. As discussed earlier in NEETS, module 6, *Introduction to Electronic Emission, Tubes, and Power Supplies*, most differential voltmeters can be operated as transistor voltmeters (tvm) or as differential null voltmeters. The tvm mode is used to measure the *approximate* voltage and polarity of the unknown voltage being measured. The approximate voltage, as measured in the tvm mode, is then used to make the initial range and mode switch selections for nulling the input voltage.

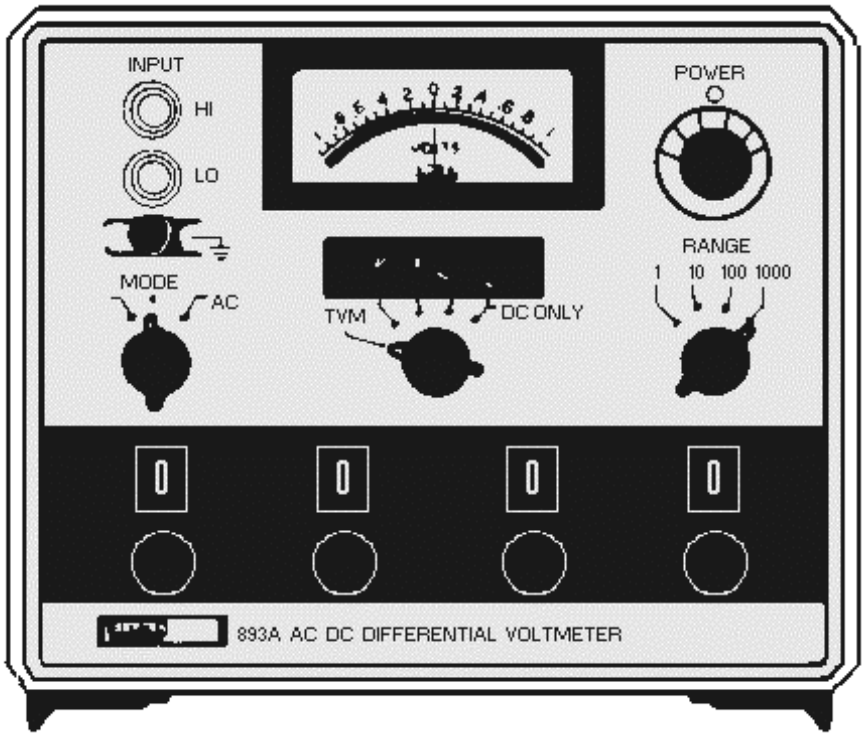

Figure 1-5.—Ac-dc differential voltmeter.

The advantages of using a differential voltmeter for measuring dc voltages are the extreme accuracy and minimal circuit loading made possible by the high input impedance of the meter. However, differential voltmeters are less portable, heavier, and require greater skill and time when performing measurements than other types of voltmeters. Additionally, they require long warm-up periods and are susceptible to variations in temperature and humidity.

Q-5. What are the advantages of using a differential voltmeter?

AC VOLTAGE MEASUREMENTS

When ac voltage measurements are performed, the input impedance of the selected test equipment determines the amount of energy removed from the circuit under test. If an ac meter is placed across a high-impedance circuit, the meter may load the high-impedance circuit and disturb circuit conditions, possibly to the point of causing the circuit to cease functioning. A dc electronic voltmeter, used in conjunction with a rectifying probe, extracts only a small amount of energy from the circuit under test. Another advantage of an electronic voltmeter over the analog voltmeter is that voltages of low values can be accurately measured.

If the circuit being measured is a relatively high-frequency circuit, the internal capacitance of an analog voltmeter rectifier could produce a disturbance by detuning the circuit. Figure 1-6 depicts the frequency response of a Simpson 260. Note the percent of error introduced at different frequencies. For high-frequency voltage measurements, an electronic voltmeter or an oscilloscope should be used. The sensitivity of the meter (or oscilloscope) determines the lowest voltage it can measure accurately, and the shunt capacitance of its input determines the upper frequency limits. It should be clear that the frequency response of a piece of test equipment is just as important as its range limitations. If you exceed the *range limitations* of a meter, it will either "peg" the meter or belch out the smell of smoke that many of us are intimately acquainted with. This, however, is not the case when you exceed the *frequency limitations* of your test equipment. Your test equipment will normally show a response, but that response will be grossly inaccurate. The lesson to be learned here is that you should be fully aware of the limitations of your test equipment and adhere to them.

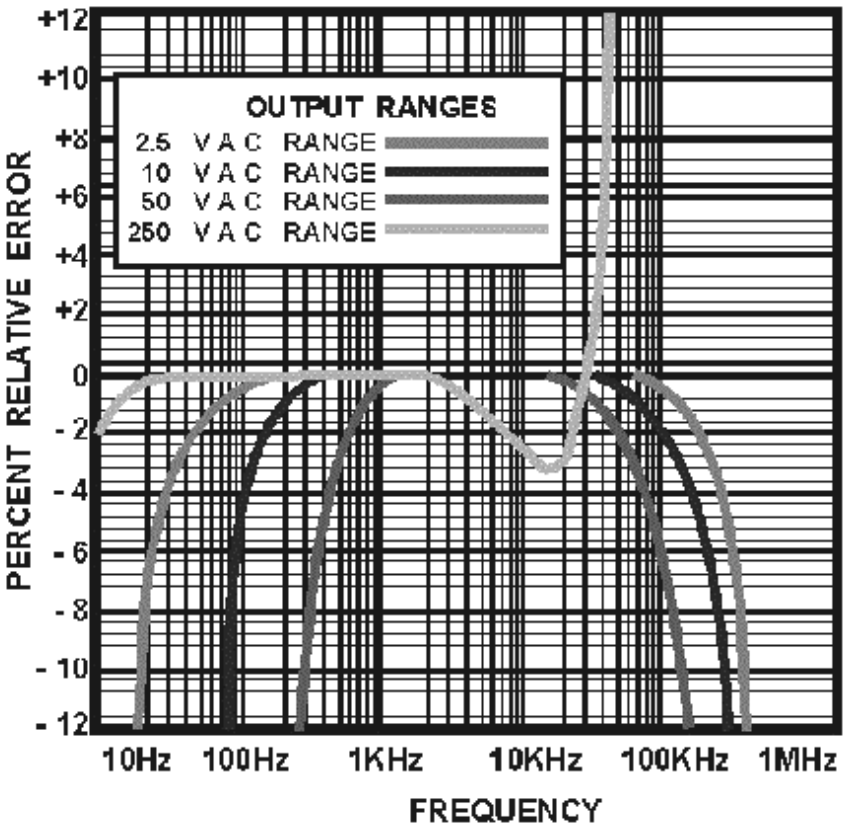

Figure 1-6.—Simpson 260 frequency response for ac voltage ranges.

Q-6. The frequency response of test equipment refers to what aspect of ac voltage measurements?

Multimeter Method

As previously stated, an analog multimeter's usefulness is limited by its low input impedance and poor accuracy (typically ±2%). However, rugged construction and ease of operation make analog multimeters extremely useful whenever poor accuracy and low input impedance can be tolerated. When performing ac voltage measurements with a multimeter, be certain that the frequency of the signal being measured falls within the upper and lower frequency limitations of the meter.

Oscilloscope Method

A major advantage of using an oscilloscope for ac voltage measurements is that the waveform can be observed; consequently, errors in measuring complex peak voltages are minimized. An oscilloscope may be used as a high-impedance ac voltmeter. In standard oscilloscopes, the vertical amplifier input impedance is generally greater than 1 megohm, making it possible to measure voltages in high-impedance circuits. If the signal is applied directly to the plates, rather than at the vertical amplifier input, the input impedance is increased considerably.

Voltage measurements are most easily made when the deflection of the trace extends across the major portion of the oscilloscope screen; whenever possible, the trace should cover at least 60% of the vertical viewing area of the screen. If the amplitude of the measured voltage is very low, the trace dimensions may be small. If a voltage to be measured is large and cannot be attenuated to a usable value by attenuation circuits within the oscilloscope, an external resistive or capacitive voltage divider can be used. Such voltage dividers are often furnished with oscilloscope test sets and are called HIGH VOLTAGE PROBES. When the voltage of pulses or other complete waveforms is being measured, the high voltage probe selected must be so designed as not to distort the measured signal. Most probes have adjustable (compensating) capacitors that are used to adjust the symmetry of the displayed waveform. You adjust the probe by monitoring either the calibrator output of the oscilloscope or a known good signal and adjusting the probe for a symmetrical display. Oscilloscopes are calibrated to display peak-to-peak values. To determine the rms voltage of a sinusoidal signal, divide the number of graticule units from the positive to the negative peaks by two and multiply this value by 0.707. When using the oscilloscope for ac voltage measurements, ensure the upper frequency range of the oscilloscope is not exceeded; otherwise, inaccurate values will be displayed. Most commonly used oscilloscopes have a frequency response from dc up to 100 megahertz.

Q-7. Ideally, an oscilloscope presentation should cover what vertical portion of the screen?

Digital Multimeter Method

As previously mentioned, digital multimeters present a high input impedance to the circuit under test and are fairly accurate. Many earlier models had very limited frequency responses. Even today the upper frequency limitations of digital multimeters vary from 20 kilohertz to over 300 kilohertz, depending on the model. Their upper frequency limitations can, however, be significantly extended by using optional rf probes. When you perform ac voltage measurements with a digital multimeter, remember that they are *true rms* indicating devices.

Differential Voltmeter Method

Most differential voltmeters can be used to measure both ac and dc voltages. The differential voltmeter method of measuring ac voltage is the most accurate of the common measurement techniques. Typical accuracies are ±0.05% when operated in the ac mode.

CURRENT MEASUREMENTS

Unless an ammeter is already an integral part of the circuit under test, current measurements are rarely taken. In the case of a high-resistance circuit, it will contain such a small amount of current that it cannot be measured accurately with ordinary field test equipment. In lower resistance circuits, current measurements can be taken only if the ammeter is placed in series with the circuit under test. These measurements require that a circuit connection be unsoldered or otherwise opened to insert the meter in series with the circuit. An easier method you may use to obtain a current measurement is to take a voltage measurement across a known resistance and calculate the current with Ohm's law. The accuracy of current measurements depends on the internal resistance of the meter as compared with the resistance of the external circuit. If the total circuit current is decreased by increasing the load, then the percentage of error will decrease. Therefore, greater accuracy is obtained if the meter resistance is considerably less than the load resistance. A method of obtaining greater accuracy of current measurement is to decrease the total internal meter resistance with respect to load resistance. This is accomplished by connecting two ammeters in parallel with each other and in series with the circuit in which the current is being measured. Additional ammeters may be connected in parallel in the same manner for increased accuracy. This method also increases the range of measurements that can be taken. The arithmetical sum of the indications of all the parallel meters represents the total current flow in the circuit. You should note that this is not a common test method and that your test equipment may be damaged if connected incorrectly.

MULTIMETER METHOD

As previously mentioned, current measurements are usually taken by breaking the current path of the circuit under test and electrically inserting a meter in series. This is normally accomplished by disconnecting a wire from a terminal or unsoldering one end of a component and electrically inserting the meter in series using the meter leads. This method is both time consuming and usually requires the use of a soldering iron, which can damage components. Most analog multimeters cannot be used for measuring ac current and are only accurate to within ±2% on dc ranges.

Q-8. What are the advantages of connecting ammeters in parallel when performing current measurements?

DIGITAL MULTIMETER METHOD

Unlike the analog multimeter, the digital multimeter will measure ac current as well as dc current. Again, current measurements are taken by breaking the current path and inserting the meter in series. Regardless of whether you're using an analog multimeter or digital multimeter, this procedure for measuring current is time consuming. However, there is a major advantage to be gained by using the digital multimeter — its high degree of accuracy. The Fluke 8000A digital multimeter, for example, is accurate to within ±0.3% when measuring dc current and ±1% when measuring ac current. These accuracies are representative of most medium-priced digital multimeters.

CURRENT TRACERS

For the purpose of discussion, we have selected the Hewlett-Packard 547A, shown in figure 1-7, as a representative current tracer. A current tracer will not actually measure current; it is designed to indicate the presence of current and the relative magnitude of one source of current as compared to another. The Hewlett-Packard 547A is a hand-held probe that enables you to precisely localize low-impedance faults in a circuit. The probe senses the magnetic field generated by a pulsing current and lights an indicator lamp near the current tracer tip. The brightness of the indicator lamp is proportional to the magnitude of the current. The sensitivity of the indicator lamp can be adjusted with a thumb-wheel potentiometer located on the probe. Figure 1-8 depicts a typical logic circuit application for a current tracer. Current tracers are

ideally suited for locating shorted or opened printed-circuit-board runs, wires, or components. In the absence of a suitable pulsing current to drive the current tracer, a logic pulser or pulse generator may be used as a signal source. The inherent disadvantage of a current tracer is that it requires an external power supply. They can, however, be connected to the power supply of the equipment under test if the voltage is correct.

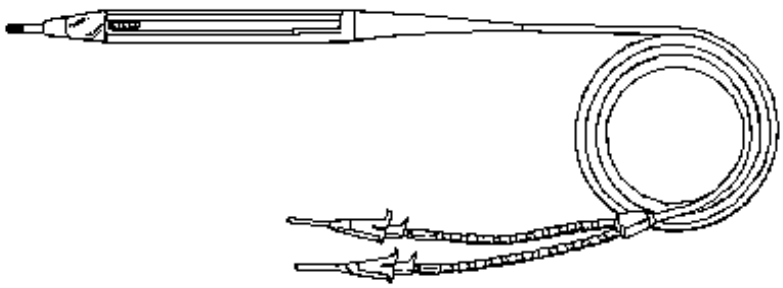

Figure 1-7.—Current tracer.

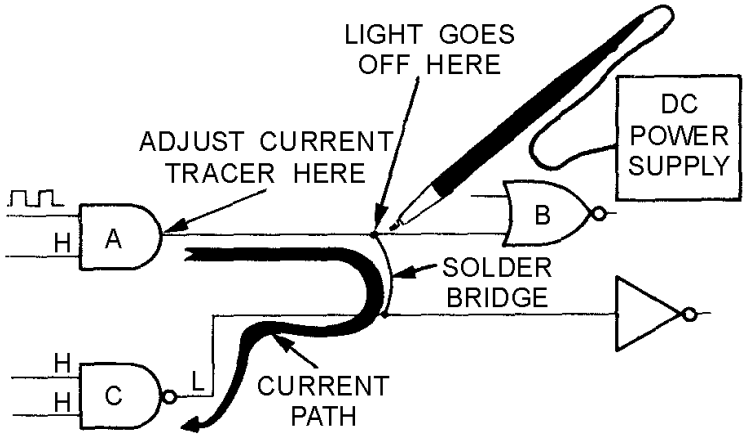

Figure 1-8.—Current tracer application.

CURRENT PROBES

Current probes, as shown in figure 1-9, are primarily designed to be used with an oscilloscope or milliammeter for measuring current. Although not used very often by Navy technicians, current probes are available. The primary advantage in using a current probe is that it does not need to be in series with the current being measured. Unsoldering wires or connections to terminals is not necessary; current probes are designed to be clamped onto insulated conductors. They are able to sense, through inductive action, the magnitude of the current flowing in the conductor. Current probes are designed for performing small ac current measurements. Also, when you use them in conjunction with current probe amplifiers, the capabilities of the current probe are extended to measurement of both ac and dc currents with large magnitudes. Current probes are extremely useful when you measure the current drain on a power supply, start-up current of a motor, or current flow in relays. These probes can be divided into three basic types: passive, active, and Hall effect. Each type has advantages and disadvantages peculiar to its method of operation. Prior to using a current probe, you should thoroughly understand its instructions.

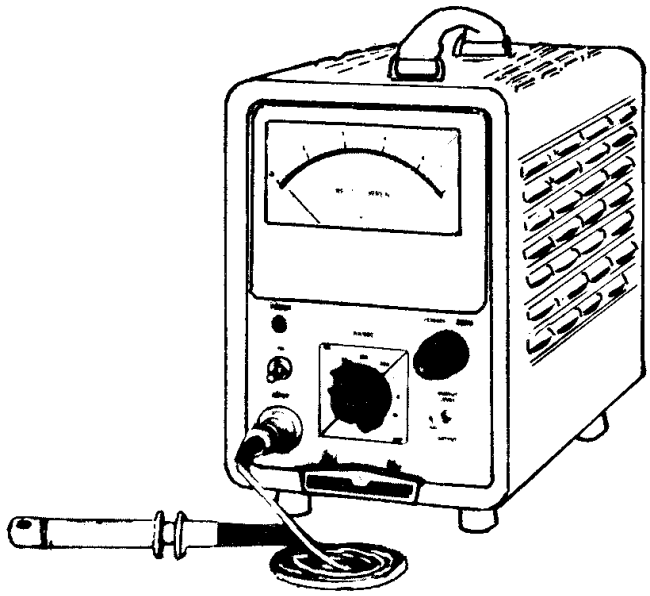

Figure 1-9.—Current probe used with electronic ammeter.

Q-9. What is the primary advantage of using a current probe?

OSCILLOSCOPE METHOD

Current can be measured with an oscilloscope by shunting the input terminals with a low-value resistor. The input terminals must then be connected in series with the circuit being tested. The value of the resistor must be small enough not to interfere with the operation of the circuit under test. At the same time, it must be large enough that the voltage developed will cause adequate deflection of the oscilloscope trace. For example, if an oscilloscope with a vertical deflection sensitivity of 0.1volt rms per centimeter (cm) is used in conjunction with a 10-ohm shunt resistor to measure a 25-milliamp current, the vertical trace will be deflected 2.5 centimeters, as shown in the following example:

Where:

$$I = 25 \text{ mA}$$

$$R = 10 \text{ ohms}$$

$$\text{Sensitivity} = 0.1 \text{ volt/cm}$$

First we'll figure the applied voltage:

$$E = IR$$

$$E = 0.025 \text{ A} \times 10 \text{ ohms} = 0.25 \text{ volts}$$

Now let's figure the deflection in cm:

$$\text{Deflection} = \frac{\text{voltage applied}}{\text{sencitivity}}$$

$$\text{Deflection} = \frac{0.25 \text{ volt}}{0.1 \text{ volt/cm}} = 2.5 \text{ cm}$$

For current measurements the oscilloscope can be calibrated by connecting an ammeter in series with the input terminals and the calibration signal source. An alternate method is to determine the value of the

shunt resistor and measure the calibration signal voltage developed across it with an accurate voltmeter. The calibration signal current can then be calculated by means of Ohm's law. Since the oscilloscope merely indicates the voltage developed across the shunt resistor, the measurements for alternating or direct current will be similar to voltage measurements using an oscilloscope.

RESISTANCE MEASUREMENTS

A high percentage of technical manuals contain point-to-point resistance charts that list correct resistance readings for major test points. These resistance charts are extremely useful when you troubleshoot faulty equipment. Without them, equipment resistance measurements within a complicated circuit would not mean much. Many circuits contain other circuit elements, such as capacitors, coils, or other resistors in parallel with the resistances being measured. This, of course, is a possible source of measurement error that you eliminate when you disconnect or unsolder one side of the resistor or a group of resistors under test.

You should be thoroughly familiar with the calibration of your ohmmeter. Analog meters are typically more accurate and easier to read at midscale. With the exception of bridge circuits, a meter may provide only approximate resistance readings. However, these readings may be adequate when you also consider the wide tolerances of resistors themselves. An ohmmeter that you use in field testing should be portable, convenient, and simple to operate - factors that usually are more important than extreme accuracy.

When an ohmmeter is used, completely de-energize the circuit under test and remove any current-sensitive elements before the resistance measurement is performed. Low-resistance measurements that require precision readings should be taken with a bridge type of instrument.

An ohmmeter consists of a galvanometer, batteries, and resistors of known value that are connected in such a way that unknown resistors to be measured are compared with standard values. Figure 1-10 illustrates three basic ohmmeter circuits: (A) single range type, (B) series multirange type, and (C) shunt type.

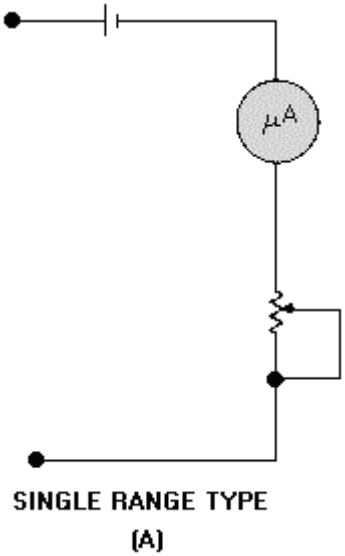

Figure 1-10A.—Basic ohmmeter circuits.

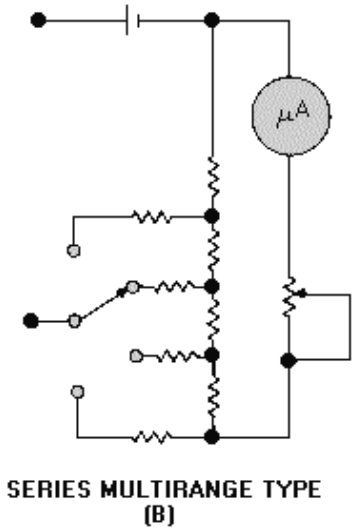

Figure 1-10B.—Basic ohmmeter circuits.

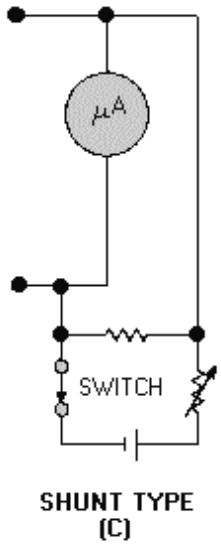

Figure 1-10C.—Basic ohmmeter circuits.

MULTIMETER METHOD

When you use an analog multimeter to perform resistance measurements, the first thing you do is zero the meter. The meter indication varies greatly depending on the resistance of the test leads, the condition of the batteries within the meter, and the resistance range selected on the multimeter. The meter should be zeroed every time you change range settings. To zero a multimeter you short the leads together and adjust the meter for a full-scale deflection. Scale markings are spaced closer together toward the infinity point on the meter; therefore, more accurate readings are obtained near center scale. You should select a range setting that will give you a mid-scale indication.

Ohmmeter applications include resistance measurements; continuity checks; and inductor, capacitor, and transformer checks. A transformer, for example, may be tested by checking whether there is an open or short, low-insulation resistance to ground, or improper continuity between transformer windings. A capacitor may be tested to determine whether it is open or shorted. Ensure that capacitors are properly discharged before you test them; otherwise, damage to the multimeter may occur. When an ohmmeter is placed in series with a capacitor, the changing current will cause a meter deflection that is proportional to the capacitance. The deflection obtained is compared with the deflection from a similar capacitor of known value. This deflection may be small or large, depending on the type and size of the capacitor and the voltage of the battery within the meter. An external series battery will increase the sensitivity of the instrument.

Q-10. How do you compensate for the resistance of the test leads of a meter?

DIGITAL MULTIMETER

The two major advantages of using a digital multimeter are its ease of operation and accuracy. Most digital multimeters can be ordered with an optional battery pack, which makes them just as portable as an analog multimeter. Another advantage is that their LED or LCD readouts are much easier to read than the scale on an analog multimeter. Digital multimeters also are ideally suited for measuring sensitive devices that might otherwise be damaged by the excessive current associated with analog multimeters — maximum current flow through the component being tested is typically limited to less than 1 milliamp. When measuring small values of resistances, remember to consider the resistance of your test leads. Most digital multimeters cannot be zeroed in the way analog multimeters can. With digital multimeters, you have to short the leads, read the lead resistance displayed, and then subtract the reading from subsequent component measurements that you make.

Q-11. Why are digital multimeters well suited for testing sensitive devices?

RCL BRIDGES

The 250DE+1325 is a typical resistance, capacitance, inductance (rcl) bridge. Like the vtvm, the rcl bridge has several disadvantages. It requires ac power and a lengthy warm-up period, and its accuracy is limited to ±2%. The rcl bridge uses a tuning indicator electron tube, commonly referred to as the bridge's "eye," and an internal arrangement of resistors that form a Wheatstone bridge. As discussed in NEETS, module 16, the rcl bridge can be a time-consuming method of performing resistance measurements.

Difficulty may be experienced when you attempt to measure wire-wound resistors. To obtain a sharp balance on the indicator, you can shunt the resistor with a variable capacitor and adjust the capacitor for the clearest indication. The resistance measurement will not be affected by this reactance neutralization.

MEGGERS

Meggers produce the large voltages that are required to measure resistances as high as 10,000 megohms — only high resistance values can be measured. The unknown resistance is connected between the megger terminals, and the hand generator part of the meter is cranked. Some meggers are capable of producing in excess of 500 volts, so use caution when you operate them. Typical applications for a megger are testing unterminated transmission lines and ac power cords for insulation breakdown.

DIFFERENTIAL VOLTMETERS

It is a seldom-known fact that the Fluke 893 ac-dc differential voltmeter can be used for measuring extremely high resistances from 10 megohms to 10^6 megohms with a typical accuracy of ±5%. This measurement method, however, requires some basic calculations on your part. The obvious advantage of the differential voltmeter is its capability of measuring extremely high resistances. Consult the Fluke 893 technical manual for initial switch settings and a more detailed explanation of its operation.

CAPACITOR MEASUREMENTS

Capacitance is that property of a circuit that produces an electrostatic field when two conducting bodies separated by a dielectric material have a potential applied to them. Capacitors are made by compressing an insulating material (dielectric) between two conductors (plates). The farad is the basic measurement of capacitance. It is dependent upon the area of the plates, the distance between the plates, and the type of dielectric used. Electrically, the farad is a measure of 1 coulomb of potential charged by 1 volt. A coulomb (the amount of current flow maintained at 1 ampere that passes a given point of a circuit in 1 second) is a large charge. Most capacitors are measured in millionths of a farad (microfarad), expressed as ∝F, or in one-millionth of a microfarad (picofarad), expressed as pF.

Capacitors incur various losses as a result of such factors as resistance in the conductors (plates) or leads, current leakage, and dielectric absorption, all of which affect the power factor of the capacitor. Theoretically, the power factor of an ideal capacitor should be zero; however, the losses listed above cause the power factors of practical capacitors to range from near 0 to a possible 100%. The average power factor for good capacitors, excluding electrolytics, is 2% to 3%. Current leakage, which is an inverse function of frequency, is important only at the lower frequencies and becomes negligible at higher frequencies. Dielectric absorption (sometimes referred to as dielectric viscosity) results in losses that produce heat. The effect of this type of loss is the same as resistance in series with the capacitor.

You have probably learned the hard way that some capacitors can retain a charge long after the voltage has been removed. The electrical charge retained by capacitors in de-energized electronic circuits is, in many cases, sufficient to cause a lethal shock. Be sure you and those working with you consider this hazard before performing any type of maintenance on any electrical or electronic circuit and before making connections to a seemingly dead circuit. Use extreme caution prior to working on or near de-energized circuits that employ large capacitors. Be safe—discharge and ground all high-voltage capacitors and exposed high-voltage terminal leads by using only an authorized shorting probe, as shown in figure 1-11. Repeat discharge operations several times to make sure that all high-voltage terminations are completely discharged. It is of the utmost importance that you use only an *authorized* safety shorting probe to discharge the circuits before performing any work on them. An authorized *general-purpose* safety shorting probe for naval service application may be requisitioned using the current stock number listed in the ELECTRONICS INSTALLATION AND MAINTENANCE BOOK (EIBM), *General* NAVSEA 0967-LP-000-0100, Section 3, Safety Equipment. Certain electronic equipment are provided with built-in, special-purpose safety shorting probes. These probes are *not* considered general purpose. Use them only with the equipment for which they are provided and only in a manner specified by the technical manuals for the equipment. It is considered to be poor practice to remove them for use elsewhere.

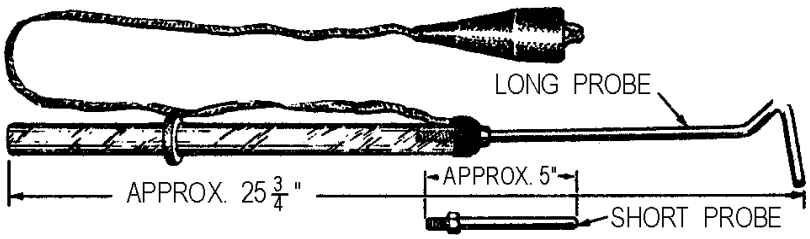

Figure 1-11.—Safety shorting probe.

When using the general-purpose safety shorting probe, always be sure first to connect the grounding clip to a good ground connection (if necessary, scrape the paint off the grounding metal to make a good contact — paint can be replaced, lives can't). Then, while holding the safety shorting probe by the handle behind the protective shield, touch the end of the metal rod to the points to be discharged. Touch each point several times to ensure that the circuit is completely discharged. Be extremely careful that *you* do not touch any of the metal parts of the safety shorting probe while touching the probe to the exposed "hot" terminal. Don't develop a nonchalant or routine attitude about these procedures. It pays to be safe; use the safety shorting probe with care.

Large capacitors, dormant in storage, can also develop a large static charge. This charge is caused by environmental conditions such as a close proximity to an rf field. An easy way to avoid this condition is to short the stored capacitor's terminals with a piece of wire before putting it in storage. Remember to remove the wire before installing the capacitor. If you receive a large capacitor that is not shorted, short the terminals together. Remember, CHARGED CAPACITORS CAN KILL.

Q-12. Charged capacitors can kill. True or false?

BRIDGE-TYPE MEASUREMENTS

Capacitor tests involving quality and value must be made in the course of everyday troubleshooting. You must make the important decision of whether to reject or continue to use a certain capacitor after it has been tested. Capacitance measurements are usually accomplished by either a bridge-type or a reactance-type capacitance meter. The bridge-type capacitance meter is much more accurate than the reactance-type meter. You may want to review rcl bridges in chapter 1 of NEETS, module 16, before reading further. Capacitance tolerances vary more widely than resistance tolerances and are dependent upon the type of capacitor, the capacitance value, and the voltage rating. The results of capacitance tests must be evaluated to determine whether a particular capacitor will fulfill the requirements of the circuit in which it is used.

The power factor of a capacitor is important because it is an indication of the various losses attributable to the dielectric, such as current leakage and dielectric absorption. Current leakage is of considerable importance, especially in electrolytic capacitors.

Figure 1-12 is a simplified schematic of a capacitance bridge. As you can see, a capacitance bridge is very similar in construction to a resistance bridge with the exception of the standard capacitor (C_S) and the unknown capacitor (C_X). Because current varies inversely with resistance and directly with capacitance, an inverse proportion exists between the four arms of the bridge. The following expression shows the inverse proportion between resistors A and B and capacitors C_S and C_X:

$$\frac{A}{B} = \frac{C_X}{C_S}$$

Solving for C_X:

$$C_X = \frac{AC_S}{B}$$

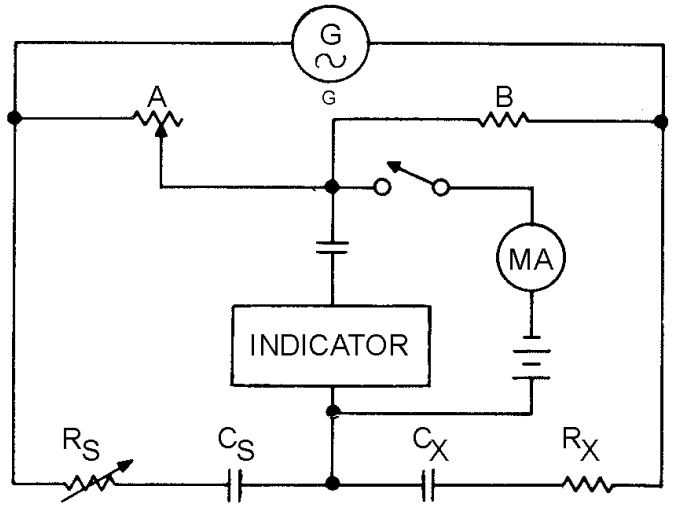

Figure 1-12.—Simplified capacitance bridge.

It is actually the capacitive reactance, rather than the capacitance, that is balanced in this circuit.

In addition to its reactive properties, the capacitor under test always exhibits some loss. This loss may have the characteristics of either a shunt or series resistance, or it may be a combination of both. Regardless of its true nature, the loss can always be represented as a simple series resistance, which is shown in figure 1-12 as R_X. This loss is balanced by the calibrated resistor R_S. Rather than calibrate this control in terms of resistance, it is convenient to calibrate it in terms of the dissipation factor (the ratio of the energy dissipated to the energy stored in a capacitor). The R_S control then provides the means for completing the capacitance balance, and its dial reading indicates a loss figure for the capacitor under test.

Q-13. Which is more accurate, the bridge- or reactance-type meter?

REACTANCE-TYPE MEASUREMENTS

The reactance type of capacitance measuring equipment makes use of the following principle: If an ac voltage (usually 6.3 volts) at a fixed frequency is applied across a capacitor and resistor in series, the voltage drop produced across the reactance of the capacitor by the resulting current flow is inversely proportional to the capacitance. The voltage drop is used to actuate a meter that is calibrated in capacitance values. This test equipment gives approximate values only and, like the ohmmeter, is used mostly when portability and speed are more important than precision. The accuracy of the reactance-type measurement is less for capacitors that have a high power factor. In capacitors with high power factors, the losses incurred effectively place a certain amount of resistance in series with the capacitive reactance. The effect of this resistance, when the capacitor is measured, is to cause a greater voltage drop across the capacitor. This drop is not because of the reactance above, but is the result of the impedance, which of

course is made up of both the reactance and the resistance. Therefore, the capacitance indicated by the analyzer will be lower than the actual value.

Figure 1-13 shows a simplified schematic diagram of the capacitance-measuring section of a typical reactance-type electronic volt-ohm-capacitance milliammeter. A 6.3-vac voltage is taken from the filament source and applied across the resistive voltage divider network to determine the designated value of the capacitor. Because of a particular use or circuit application, some capacitors are permitted an even wider variation of capacitance value than is indicated by their rated tolerances.

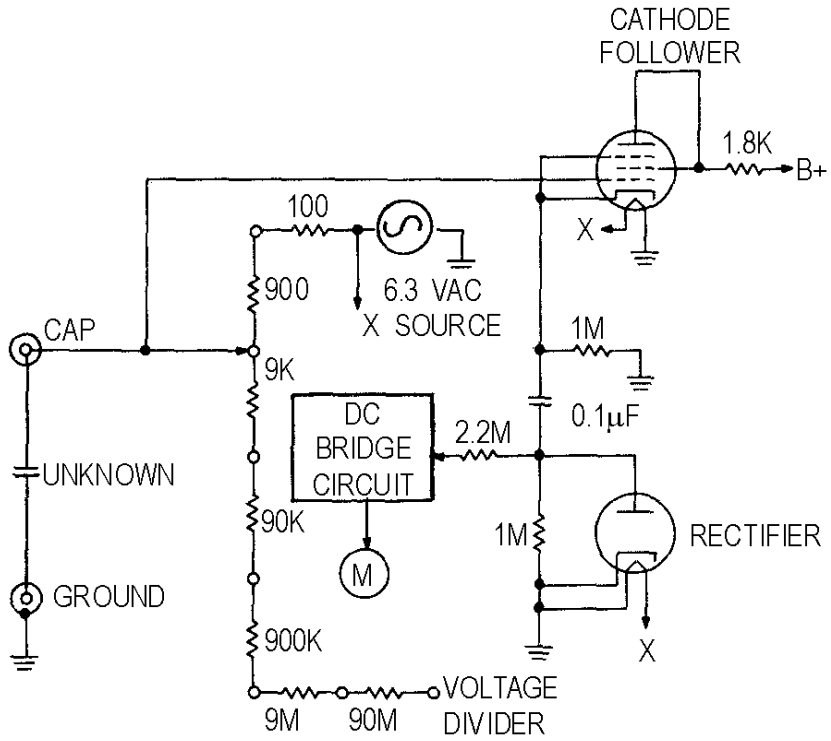

Figure 1-13.—Reactance-type capacitance meter.

INDUCTANCE MEASUREMENT

A current flowing through a conductor produces a magnetic field around that conductor. If the conductor is formed into a coil, a stronger magnetic field is set up. The relationship between the strength of the field and the intensity of the current causing it is expressed by the inductance of the coil (or conductor). When the current producing the magnetic field ceases, the energy of the magnetic field is returned in part to the circuit source in the form of a reverse current. Inductance, then, is the ability of a coil to function as a storehouse of energy in magnetic form and is determined by the shape and dimensions of the coil. Inductance is measured in henries, millihenries, or microhenries. Inductors can be described generally as circuit elements used to introduce inductive reactance into ac circuits.

An inductor is essentially a coil of wire wound around a form using a core of air, magnetic metal, or nonmagnetic metal. A core of magnetic metal produces greater inductance (for a coil of given size and number of turns) than does an air core; a core of nonmagnetic metal produces less inductance than does an air core. At frequencies in the hf and higher regions of the frequency spectrum, coils of small size and

high *Q* (discussed briefly at the end of this section) are generally required. These coils usually are single-layered with air or metallic cores. Since comparatively low values of inductance are required, this type of coil is very compact, and relatively high values of *Q* are obtained.

At frequencies in the lf and mf regions of the frequency spectrum, single-layered, universal, spiral, and other types of windings are used. When size is a factor, the more compact windings are preferred to the single-layered type of coil. At frequencies below 500 kilohertz, the single-layered type is too large for practical use; therefore, the more compact types are used exclusively.

The inherent resistance of the conductor with which an inductor is wound is the most important factor contributing to the losses of the inductor. Losses caused by this resistance increase with frequency. This results in a concentration of current near the outer surface of the wire, called SKIN EFFECT. Skin effect is negligible at low frequencies, but can be an important factor at high frequencies. Other contributing factors to inductor losses are (1) eddy currents set up in the core and surrounding objects (if they are conductors); (2) the dielectric properties of the form used for the coil and surrounding objects; and (3) hysteresis in the core and surrounding objects, if they are magnetic metals. Losses occur as a result of the dielectric properties of the coil form because of the distributed capacitance of the inductor (for example, between turns and between the terminals and leads). To some extent the core and surrounding objects serve as a dielectric of the distributed capacitance, and the resulting dielectric losses contribute to the overall losses of the inductor.

As we discussed earlier, an inductor has the ability to act as a storehouse of magnetic energy. However, because of the various loss factors described above, all of the energy stored in the magnetic field is not returned to the source when the applied voltage decreases to zero. The losses of an inductor may be represented by an equivalent series resistance. The value that it would dissipate would be an amount of energy equal to the total amount dissipated by the inductor. The losses of an inductor may be expressed in terms of the ratio of its inductive reactance to its equivalent series resistance. This ratio is referred to as the Q of the inductor and is stated in equation form as shown below:

$$Q = \frac{X_L}{R}$$

Q-14. What type of core produces the greatest inductance?

HAY BRIDGE

Inductance measurements are seldom required in the course of troubleshooting. However, in some cases inductance measurements are useful and instruments are available for making this test. Many capacitance test sets can be used to measure inductance. Most manufacturers of capacitance test sets furnish inductance conversion charts if the test equipment scale is not calibrated to read the value of inductance directly. For the measurement of inductance, the following basic types of test equipment circuitry are used: (1) the bridge-circuit type, which is the most accurate, and (2) the reactance type, which is often an additional test circuit incorporated into another piece of test equipment to increase its utility. The measurement of capacitance using the capacitance-inductance-resistance bridge instrument was discussed. Since the measurement of capacitance and inductance are interrelated, the existing capacitance standards and loss controls of this test equipment are used whenever possible. A wider range of dissipation must be provided to accommodate the practical value of inductors. The 250DE+1325 (view A of fig. 1-14), a typical rcl bridge and our reference in this discussion, uses two basic bridge circuits (Hay bridge and Maxwell bridge) to accommodate the extensive range in inductor loss factors. You should take time to review the bridges in NEETS, module 16, or other bridge-circuit descriptions before continuing.

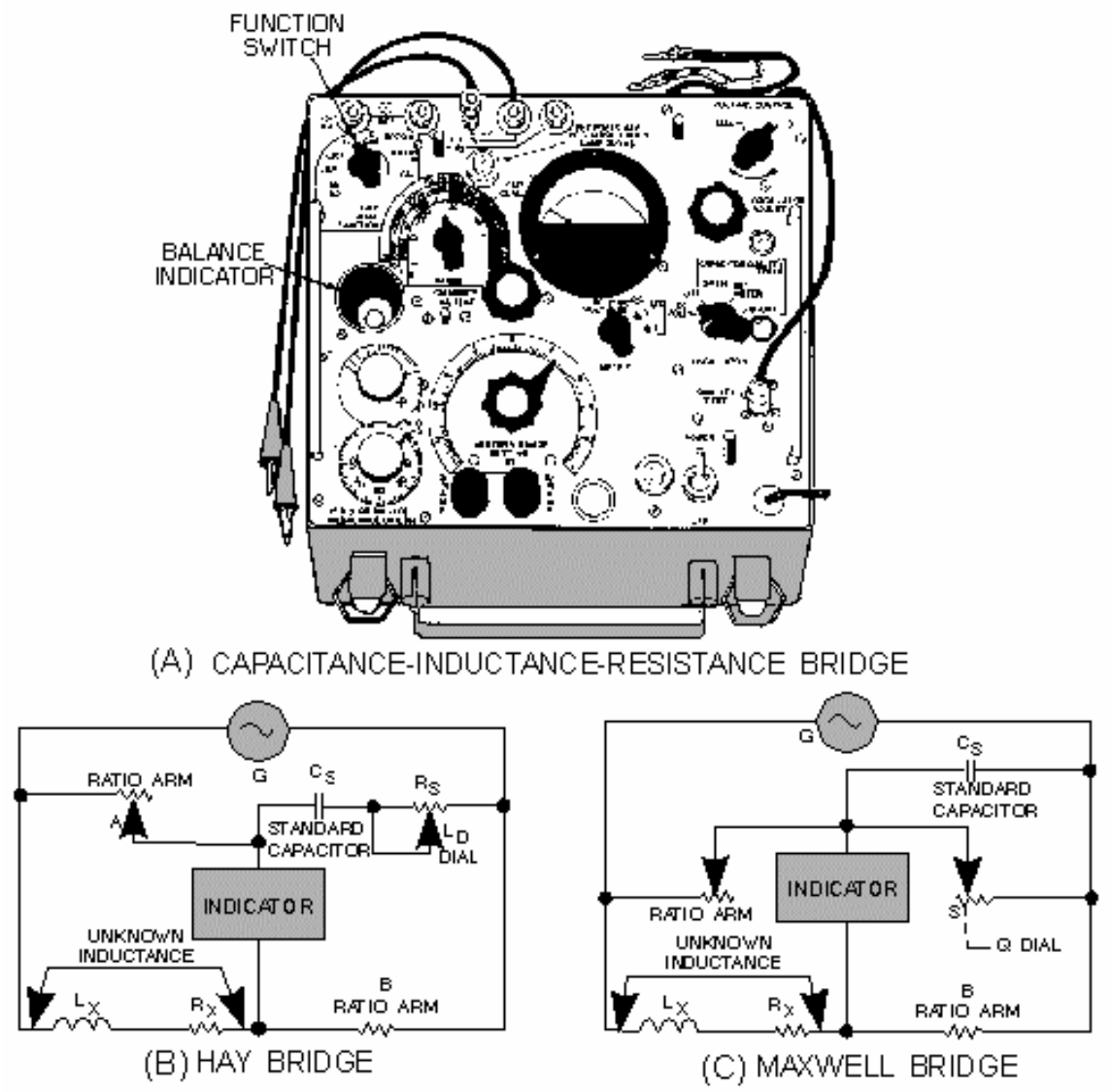

Figure 1-14.—Bridge circuits.

The Hay bridge (view B of fig. 1-14) measures inductance by comparing it with a capacitance; it differs from the Maxwell bridge (view C) in that the resistance associated with the capacitance is a series instead of a shunt resistance. The inductance balance depends upon the losses (*Q*) of the inductor. The Hay bridge is used for inductors with low losses low D dial reading or high *Q*) at 1 kilohertz. This circuit is in effect when the FUNCTION switch is turned to the L(D) position. For a D dial reading up to 0.05, the error is 0.25%. Above this point the error increases rapidly and affects the basic accuracy of the test equipment. This limitation is expressed on the front panel of the test equipment as follows: IF D>0.05 ON L(D)—REBALANCE ON L(Q) . In other words, if the dissipation of an inductor, as read on the D dial when using the Hay bridge (FUNCTION switch set to L(D) position), exceeds 0.05, then you should change to the Maxwell bridge (FUNCTION switch set to L(Q) position), which is discussed in the following paragraph. The loss factor of the inductor under test is then balanced in terms of the *Q* of the inductor.

Q-15. A Hay bridge measures inductance by comparing an inductor to what component?

MAXWELL BRIDGE

The Maxwell bridge, shown in view C of figure 1-14, measures inductance by comparing it with a capacitance and (effectively) two resistances.] This bridge circuit is employed for measuring inductances having losses greater than 0.05 (expressed by the D dial reading). For such inductors it is necessary to introduce, in place of the series control (D dial), a new loss control (Q dial), which shunts the standard capacitor. This control, which becomes effective when the FUNCTION switch is turned to the L(Q) position, is conveniently calibrated in values of Q, the storage factor of the inductor under measurement. The balance for inductance is the same for either bridge circuit. This permits the use of the same markings on the RANGE switch for both the L(D) and L(Q) positions of the FUNCTION switch.

REACTANCE MEASURING EQUIPMENT

The reactance type of inductance measuring equipment makes use of the following principle: If an ac voltage of fixed frequency is applied across an inductor (and a resistor in series), the voltage drop produced across the reactance of the inductor by the resulting current flow is directly proportional to the value of the inductance. An inductance measurement using the reactance method is identical to capacitance measurements using the same method, except that current flow is directly proportional to the value of inductance, rather than inversely proportional as in the case of capacitance. It follows then that if a reactance-type capacitance measuring equipment is provided with a chart that converts the capacitance readings to equivalent inductance values and a proper range multiplying factor, the same test setup can be used to measure both capacitance and inductance. In practice, test equipment using the reactance method for capacitance measurements usually provides an inductance conversion chart. Because the current flowing through the inductance under test is directly proportional to the value of inductance, the reciprocals of the capacitance range multipliers must be used; for example, a multiplier of 0.1 becomes

$$\frac{1}{0.1} \text{ or } 10$$

and a multiplier of 100 becomes

$$\frac{1}{100} \text{ or } 0.01$$

The reactance-type equipment gives approximate values only. Like the analog multimeter, it is used only when portability and speed are more important than precision. If the ohmic resistance of the inductor is low, the inductance value obtained from the conversion chart can be used directly. If the ohmic value (as measured with an ohmmeter) is appreciable, a more accurate value of inductance can be obtained by use of the following formula:

$$L = \frac{(Z_L)^2 - (R_L)^2}{2\pi f}$$

Where:

L = the inductance

Z_L = the impedance of the inductance under test

f = the frequency

R_L = the ohmic resistance

Q-16. Is the current flow through an inductor directly proportional or inversely proportional to its inductance value?

MEASUREMENT OF INDUCTANCE USING THE VTVM

If you do not have a 250DE+1325 at your disposal, the inductance of a coil can be determined by using a vtvm and a decade resistance box, as shown in figure 1-15. In the following example the inductance of an unknown coil in the secondary winding of a 6.3-volt filament transformer will be determined with a vtvm and decade resistance box. The unknown coil must be connected in series with the decade resistance box. The voltage across the decade box and across the coil must be monitored as the decade box is adjusted. When equal voltages are reached, read the resistance of the decade box. Since the voltage across the inductor equals the voltage across the decade box, the X_L of the coil must be equal to the resistance read on the decade box. For example, assume that the resistance reading on the decade box is 4 kilohms and the frequency is 60 hertz. This must mean that the X_L of the coil is also equal to 4,000 ohms. The inductance formula $L = X_L/2\pi f$ can be used to find the inductance of the coil in henries:

$$L = \frac{4000\Omega}{(6.28)(60)}$$

$$L = \frac{4000\Omega}{376.8}$$

$$L = 10.62H$$

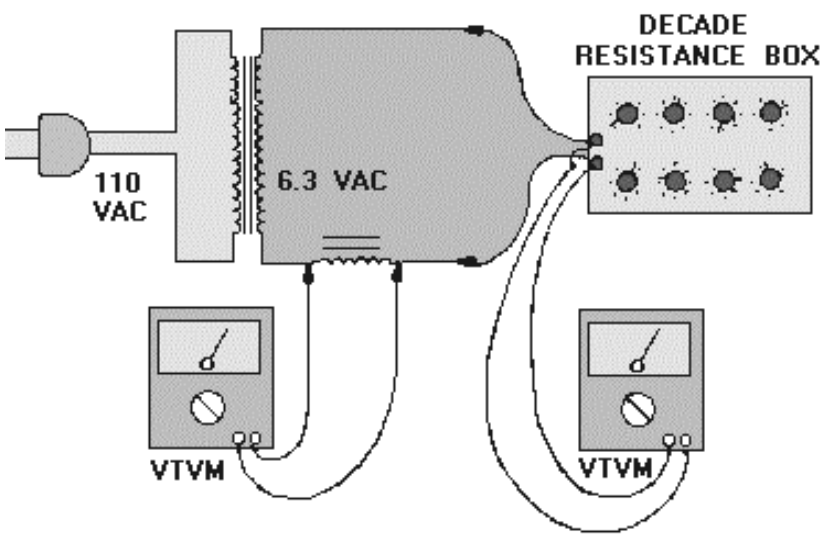

Figure 1-15.—Determining inductance with a vtvm and decade resistance box.

SUMMARY

This chapter has presented information on basic measurements. The information that follows summarizes the important points of this chapter.

The five basic measurements are **VOLTAGE, CURRENT, RESISTANCE, CAPACITANCE**, and **INDUCTANCE**. The accuracy of all measurements depends upon YOUR SKILL as a technician and the accuracy of your TEST EQUIPMENT.

Accuracy of different types of test equipment varies greatly and depends on design characteristics, tolerances of individual components, and YOUR KNOWLEDGE of test equipment applications.

The **METCAL** program ensures that your calibrated test equipment meets established specifications.

Most equipment technical manuals contain VOLTAGE CHARTS which list correct voltages that should be obtained at various test points.

It is important to remember that the **INPUT IMPEDANCE** of your test equipment must be high enough to prevent circuit loading.

When you are performing ac voltage measurements, an additional consideration that greatly affects the accuracy of your measurements is the **FREQUENCY LIMITATIONS** of your test equipment.

Ac and dc CURRENT MEASUREMENTS can be performed using a wide variety of test equipment. Most current measurements require you to break the current path by unsoldering components and wires and inserting an ammeter in series with the current path. One alternative method is to compute (using OHM'S LAW) the current through a circuit by measuring the voltage drop across a known resistance. Another alternative is to use a CURRENT PROBE that requires no unsoldering.

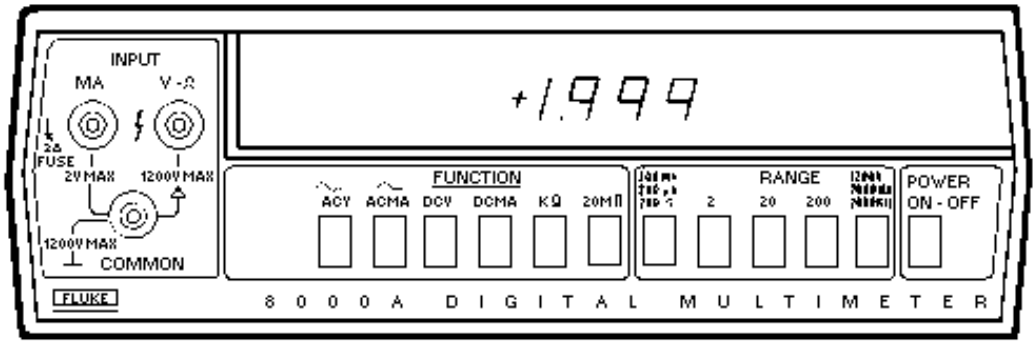

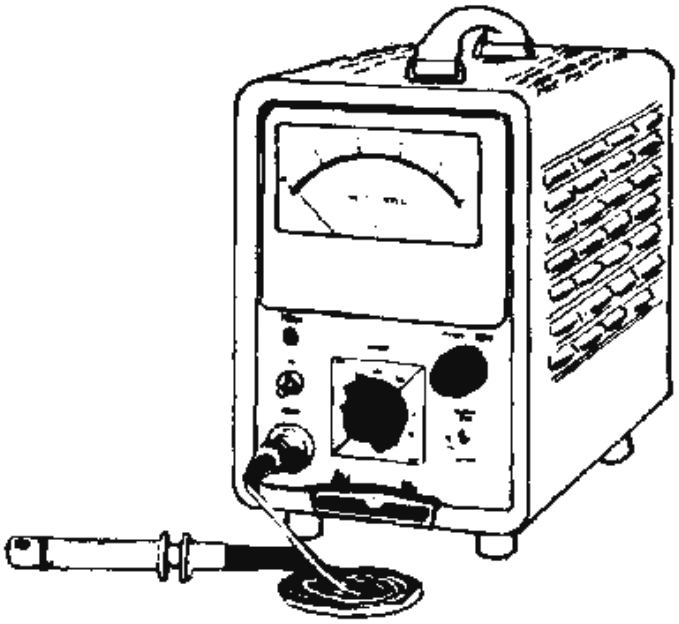

When performing resistance measurements, your primary concerns are the **RANGE AND DEGREE OF ACCURACY** of your test equipment. In most instances, an analog multimeter is accurate enough to perform basic troubleshooting. When measuring extremely large resistances, you are sometimes required to use a MEGGER or a DIFFERENTIAL VOLTMETER.

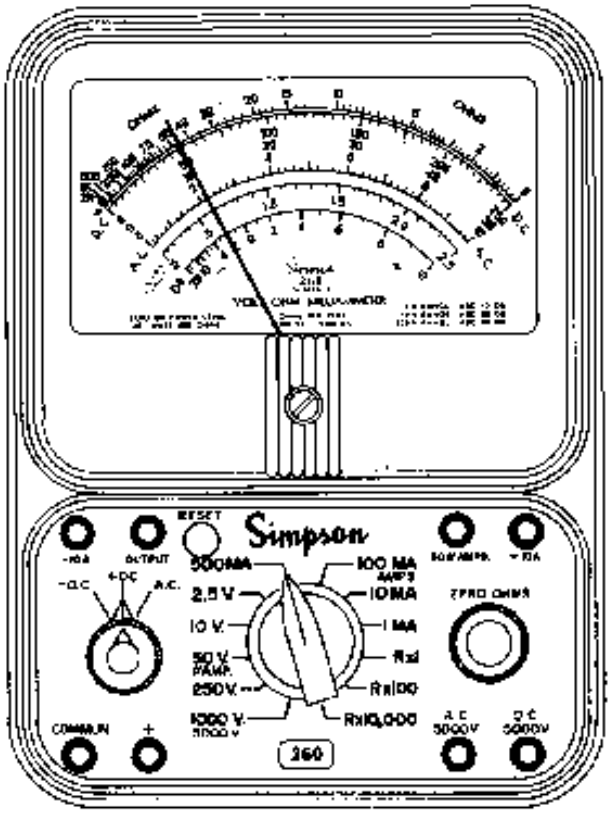

When testing current-sensitive devices, you must be certain that the current produced by your test equipment does not exceed the current limitations of the device being tested.

Capacitance and inductance measurements are seldom required in the course of troubleshooting. These measurements are usually performed with various types of BRIDGES or with a reactance type of measuring device. The bridge -measuring techniques are more commonly used and are more accurate than reactance types of measurements.

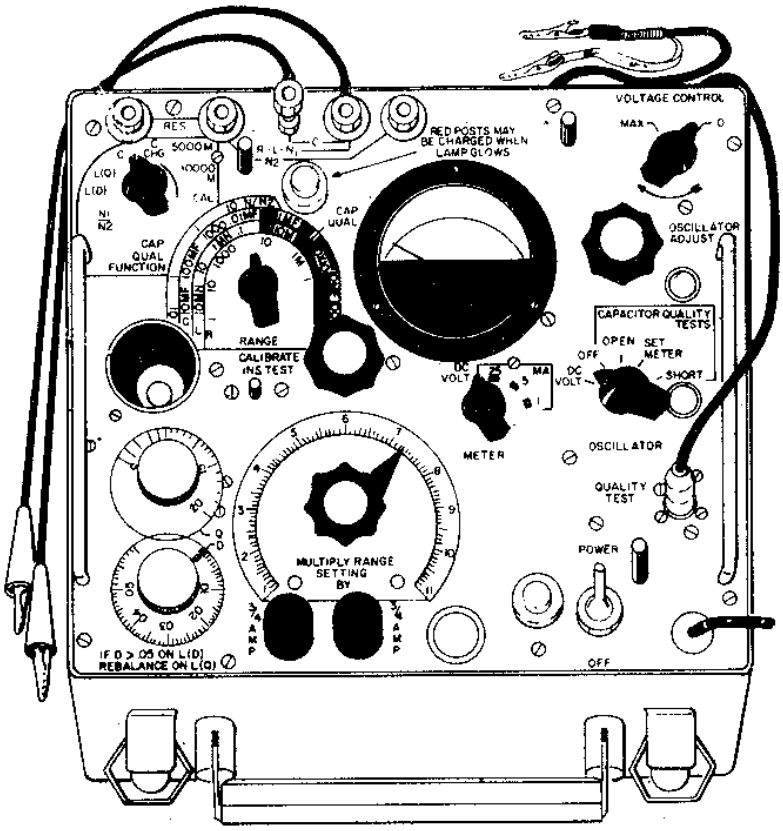

REFERENCES

8000A Digital Multimeter, *NAVSEA 0969-LP-279-9010, Naval Sea Systems Command, Washington, D.C., undated.*

EIMB, Test Methods and Practices Handbook, *NAVSEA 0967-LP-000-0130, Naval Sea Systems Command, Washington, D.C., 1980.*

EIBM, General, *NAVSEA 0967-000-0100, Naval Sea Systems Command, Washington, D.C., 1983.*

Instruction Manual for Universal Impedance Bridge, Model 250DE, *13202, Electro Scientific Industries, 13900 N. W. Science Park Drive, Portland, Oregon 97229, March 1971.*

Instruction Manual, Model 893A/AR AC-DC Differential Voltmeter, *NAVSEA 0969-LP-279-7010, Naval Sea Systems Command, Washington, D.C., 1969.*

Operation and Maintenance Instruction, *Current Tracer 547A, NAVAIR 16-45-3103, Naval Air Systems Command, Washington, D.C., 1979.*

Operation and Maintenance Instructions, Volt-Ohm-Milliammeter, *260 Series 6P, NAVSEA 0969-LP-286-1010, Naval Sea Systems Command, Washington, D.C., 1974.*

ANSWERS TO QUESTIONS Q1. THROUGH Q16.

A-1. *Its calibration.*

A-2. *10 to 1*

A-3. *Increased input impedance, greater accuracy, and increased voltage range.*

A-4. *Midscale.*

A-5. *Accuracy and high input impedance.*

A-6. *The range of frequencies that can accurately be measured.*

A-7. *At least 60% of the vertical trace.*

A-8. *Decreased internal meter resistance, greater accuracy, and greater current range.*

A-9. *Current probes enable you to perform current measurements without disconnecting wires. Current probes are clamped around the insulated wire.*

A-10. *By zeroing the meter with the test leads shorted.*

A-11. *The current flow through the component is limited to 1 milliamp.*

A-12. *True.*

A-13. *Bridge type.*

A-14. *Magnetic-metal core.*

A-15. *A capacitor.*

A-16. *Directly proportional.*

CHAPTER 2

COMPONENT TESTING

LEARNING OBJECTIVES

Upon completion of this chapter, you will be able to do the following:

1. Explain the importance of testing individual electronic components.
2. Identify the various methods of testing electron tubes.
3. Identify the various methods of testing semiconductors.
4. Identify the various methods of testing integrated circuits.
5. Identify the various types of testing batteries and their characteristics.
6. Identify the various methods of testing rf attenuators and resistive loads.
7. Identify the various methods of testing fiber-optic devices.

INTRODUCTION TO COMPONENT TESTING

It is imperative that you be able to troubleshoot an equipment failure to the component level. In the majority of cases, Navy technicians are expected to troubleshoot and identify faulty components. This chapter, "Component Testing," will acquaint you with alternative methods of testing various components and their parameters. A quick glance at the Navy's mission and concept of operation explains why we, in most cases, must be able to troubleshoot to the faulty component level. A ship must be a self-sustaining unit when deployed. Storage space is a primary consideration on most ships and a limiting factor for storage of bulky items or electronic modules as ready spares. Therefore, it is practical to store only individual components common to a great number of equipment types. This of course, limits the larger replacement modules available to you during troubleshooting.

Q-1. Why are most ships limited in their ability to stock replacement modules for repair of electronic equipment?

TESTING ELECTRON TUBES

In equipment that uses vacuum tubes, faulty tubes are responsible for more than 50% of all electronic equipment failures. As a result, testing of electronic tubes is important to you. You can determine the condition of a tube by substituting an identical tube known to be good for the questionable one. However, indiscriminate substitution of tubes is to be avoided for at least the following two reasons: (1) detuning of circuits may result and (2) a tube may not operate properly in a high-frequency circuit even though it performs well in a low-frequency circuit. Therefore, your knowledge of tube-testing devices and their limitations, as well as correct interpretation of the test results obtained, is indispensable for accurate and rapid maintenance.

Because the operating capabilities and design features of a tube are demonstrated by its electrical characteristics, a tube is tested by measuring those characteristics and comparing them with representative values established for that type of tube. Tubes that read abnormally high or low with respect to the standard are suspect. Practical considerations, which take into account the limitations of the tube test in predicting actual tube performance in a particular circuit, make it unnecessary to use complex and costly test equipment with laboratory accuracy. For most applications, testing of a single tube characteristic is good enough to determine tube performance. Some of the more important factors affecting the life expectancy of an electron tube are listed below:

- The circuit function of the tube
- Deterioration of the cathode coating
- A decrease in emission of impregnated emitters in aging filament-type tubes
- Defective seals that permit air to leak into the envelope and oxidize the emitting surface
- Internal short circuits and open circuits caused by vibration or excessive voltage

If the average receiving tube is not overdriven or operated continuously at maximum rating, it can have a life of at least 2,000 hours before the filament opens. Because of the expansion and contraction of tube elements during the process of heating and cooling, electrodes may lean or sag, which causes excessive noise or microphonics to develop. Other electron-tube defects are cathode-to-heater leakage and nonuniform electron emission of the cathode. These common tube defects contribute to about 50% of all electronic equipment failures. For this reason you should immediately eliminate any tube known to be faulty. However, avoid blind or random replacement of good tubes with fresh spares. The most common cause of tube failure is open filaments. Evidence of a tube defect is often obvious when the filament is open in glass-envelope tubes. You will also notice the brighter-than-normal cherry-red glow of the plate when the plate current is excessive. Also, when the tube becomes gassy or when arcing occurs between electrodes, you will probably have visual indication. Metal-encased tubes can be felt for warmth to determine if the heater is operating. You can tap a tube while it is operating in a circuit to reveal an aural indication of loose elements within the tube or microphonics, which are produced by loose elements.

Most tubes are extremely fragile and subject to damage during shipment. When you replace a tube, never make the assumption that the new tube is good because it's new. You should always test tubes before installing them.

Q-2. What is the most common cause of electron tube failure?

SUBSTITUTION METHODS

Substituting with a tube known to be in good condition is a simple method of testing a questionable tube. However, in high-frequency circuits tube substitution should be carried out in a logical sequence. Replace tubes one at a time so that you can observe the effect of differences in interelectrode capacitance in the substituted tubes on tuned circuits. The tube substitution test method cannot be used to advantage in locating more than one faulty tube in a single circuit for two reasons: (1) If both an rf amplifier tube and IF amplifier tube are defective in a receiver, replacing either one will not correct the trouble; and (2) if all the tubes are replaced, there is no way for you to know what tubes were defective. Under these conditions, using test equipment designed for testing the quality of a tube saves you valuable time.

Q-3. What is the most accurate method of determining the condition of an electron tube?

NOTE ON SYMBOLS USED IN THE FOLLOWING SECTIONS: IEEE and ANSI standards (see inside front cover) are used to define various terms, such as anode (plate) current, anode voltage, and anode resistance. This book uses E_a for anode voltage, I_a for anode current, and r_a for anode resistance. These are the same as E, I_p, and $_{rp}$ that you will see elsewhere. This module uses the terms anode and plate interchangeably.

ELECTRON TUBE TESTERS

A representative field type of electron tube tester designed to test all common low-power tubes is shown in figure 2-1. The tube test conditions are as close as possible to actual tube operating conditions and are programmed on a prepunched card. The card switch (S101, fig. 2-1) automatically programs the tube test conditions when it is actuated by a card. A card compartment on the front panel of the tester provides storage for the most frequently used cards. The cover of the tester (not shown) contains the operating instructions, the brackets for storing the technical manual, the power cord, the calibration cell for checking the meter and short tests, the calibration cards, the blank cards, and a steel hand punch.

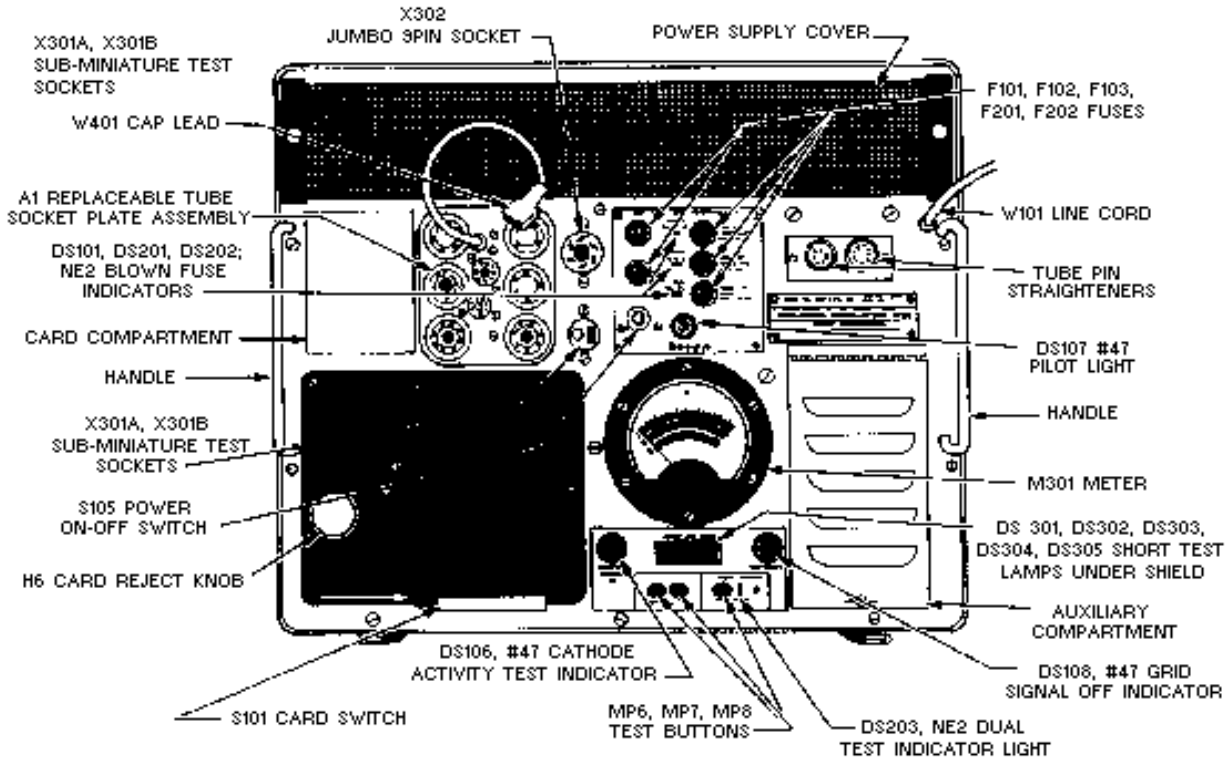

Figure 2-1.—Electron tube tester.

Front Panel

When a prepunched card is fully inserted into the card switch (S101), a microswitch is actuated that energizes a solenoid, causing the card switch contacts to complete the circuit. The card switch has 187 single-pole, single-throw switches arranged in 17 rows with 11 switches in each row. The card is used to push the switches closed; thus, the absence of a hole in the card is required to actuate a switch.

The meter (M301) contains four scales. The upper scale is graduated from 0 to 100 for direct numerical readings. The three lower scales, numbered 1, 2, and 3, are read for LEAKAGE, QUALITY, and GAS, respectively. Each numbered scale includes green and red areas marked GOOD and REPLACE. Inside a shield directly in front of the meter are five neon lamps (DS301 through DS305), which indicate shorts between tube elements.

The number 2 pushbutton (MP6) is used for transconductance, emission, and other quality tests (described later). The number 3 pushbutton (MP7) is used to test for the presence of gas in the tube envelope. The number 4 pushbutton (MP8) is used for tests on dual tubes. A neon lamp (DS203) lights when pushbutton number 4 is to be used. Eleven tube test sockets are located on the panel, plus tube pin straighteners for the 7- and 9-pin miniature tubes.

The power ON-OFF spring-return toggle switch (S105) turns the tester on by energizing a line relay. The pilot light (DS107) lights when this relay closes. Above the power ON-OFF switch are five fuses. Fuses F101, F201, and F202 protect circuits in the tester not protected by other means and have neon lamps to indicate when they have blown. Fuses F102 and F103 protect both sides of the power line.

Auxiliary Compartment

A group of auxiliary controls covered by a hinged panel is used for special tests and for calibration of the tester. Two of these controls, labeled SIGNAL CAL (R152 and R155, fig. 2-2), are used with special test cards for adjusting the regulation and amplitude of the signal voltage. A pushbutton labeled CATH ACT (S302D) is used for making cathode activity tests. When this button is pressed, DS106 on the front panel (fig. 2-1) lights, and the filament voltage of the tube under test is reduced by 10%. Results of the test are read as a change in reading on the numerical meter scale.

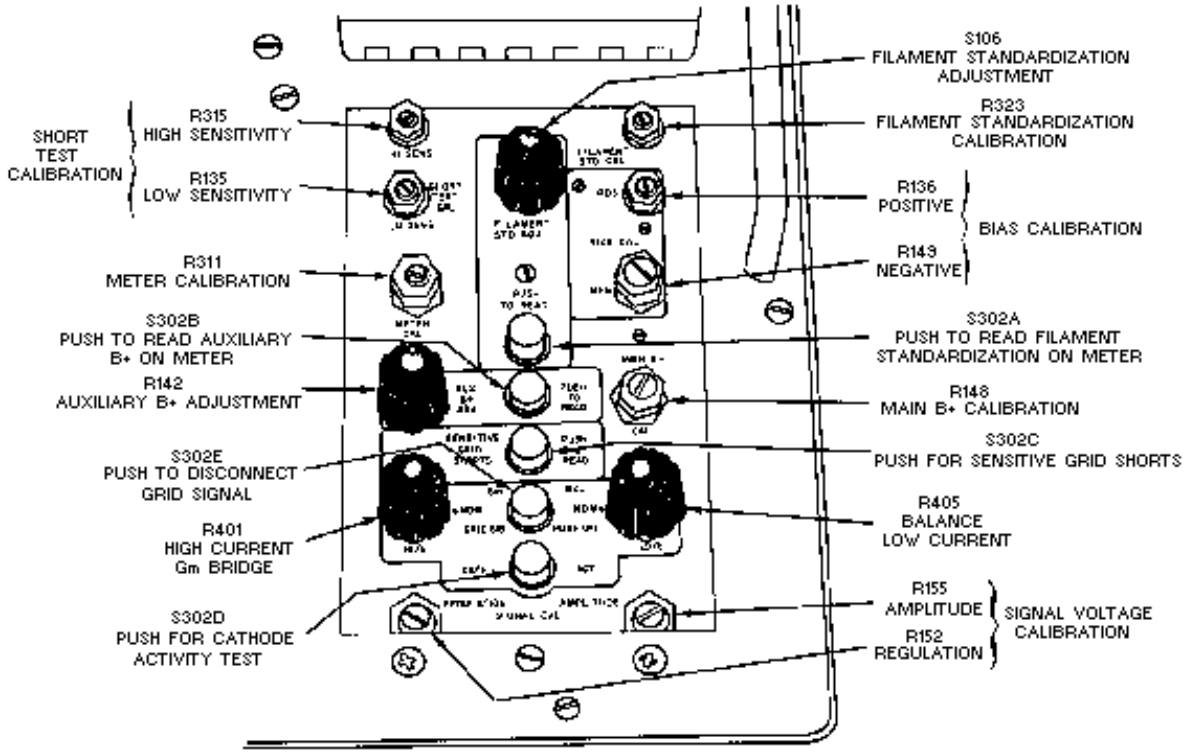

Figure 2-2.—Auxiliary compartment.

Pushbutton S302E and potentiometers R401 and R405 (fig. 2-2) are used for balancing the transconductance (Gm) bridge circuit under actual tube operating current. Pressing S302E removes the grid signal and allows a zero balance to be made with one potentiometer or the other, depending upon whether the tube under test is passing high or low plate current. Lamp DS108 on the front panel lights when S302E is pressed. Pushbutton S302C is used for checking grid-to-cathode shorts at a sensitivity much higher than the normal tests. Results of this test are indicated by the short test lamps on the front panel.

Certain special tests require the use of a continuously adjustable auxiliary power supply. By pressing pushbutton S302B, you may use meter M301 to read the voltage of the auxiliary power supply on meter M301. This voltage may be adjusted by the use of the potentiometer R142. The rest of the potentiometer controls are calibration controls and are adjusted by the use of special calibration cards and a calibration test cell.

All circuits in the tester, except the filament supply, are electronically regulated to compensate for line voltage fluctuations. The filament supply voltage is adjusted by pressing pushbutton S302A and rotating the filament standardization adjustment switch S106 until meter M301 reads midscale.

Program Cards

The circuits to be used in testing are selected by a prepunched card. These cards are made of tough vinyl plastic material. The tube numbers are printed in color on the tabs of the cards and also at the edge of the card for convenience in filing. A special card is provided to use as a marker when a card is removed for use. Blank cards are provided so that additional test cards may be punched for new tubes that are developed or to replace cards that have become unserviceable.

Operation

Before operating the tester for the first time, and periodically thereafter, you should calibrate it using the calibration test cards as described in the equipment technical manual.

NORMAL TESTS.—The tester is equipped with a three-conductor power cord, one wire of which is chassis ground. It should be plugged into a grounded 105- to 125-volt, 50- to 400-hertz outlet.

Before operating the tester, open the auxiliary compartment (fig. 2-2) and ensure that the FILAMENT STD ADJ and the Gm BAL knobs are in the NOM position. The GRID SIG and CATH ACT buttons (S302E and S302D) should be up and lamps DS108 and DS106 on the front panel should be out.

Turn on the tester and allow it to warm up for 5 to 10 minutes, then press the CARD REJECT KNOB (fig. 2-1) down until it locks. If a nontest card is installed in the card switch, remove it. This card is used to keep the switch pins in place during shipment and should be inserted before transporting the tester.

Plug the tube to be tested into its proper socket. (Use the pin straighteners before plugging in 7- and 9-pin miniature tubes.) Select the proper card or cards for the tube to be tested. Insert the card selected into the slot in the card switch until the CARD REJECT KNOB pops up. The card will operate the tester only if it is fully inserted and the printing is up and toward the operator. Do not put paper or objects other than program cards into the card switch, because they will jam the switch contacts. If the overload shuts off the tester when the card is inserted in the switch, check to see that the proper card is being used for the tube under test and that the tube under test has a direct interelement short.

As soon as the card switch is actuated, the tube under test is automatically subjected to an interelement short test and a heater-to-cathode leakage test. A blinking or steady glow of any of the short test lamps is an indication of an interelement short. If the short test lamps remain dark, no interelement shorts exist within the tube. If a short exists between two or more elements, the short test lamp or lamps connected between these elements remain dark, and the remaining lamps light. The abbreviations for the tube elements are located on the front panel just below the short test shield so that the neon lamps are between them. This enables the operator to tell which elements are shorted. Heater-to-cathode shorts are indicated as leakage currents on the #1 meter scale. If the meter reads above the green area, the tube should be replaced. A direct heater-to-cathode short causes the meter to read full scale.

To make the QUALITY test, push the number 2 button (fig. 2-1) and read the number 2 scale on meter M301 to determine if the tube is good. (This test may be one of various types, such as transconductance, emission, plate current, or voltage drop, depending upon the type of tube under test.)

To test the tube for GAS, press the number 3 button and read the number 3 meter scale. The number 2 button also goes down when number 3 is pressed. If a dual tube having two identical sections is being tested, the neon lamp (DS203) will light, indicating that both sections of the tube may be tested with one card. To do this, check the tube for shorts, leakage, quality, and gas as described previously; then hold down button number 4 and repeat these tests to test the second section of the tube. Dual tubes with sections that are not identical require two cards for testing. A second card is also provided to make special tests on certain tubes.

AUXILIARY TEST.—As mentioned previously, two special tests (cathode activity and sensitive grid shorts) may be made by use of controls located in the auxiliary compartment (fig. 2-2). The cathode activity test (CATH ACT) is used to indicate the amount of useful life remaining in the tube. By reducing the filament voltage by 10 percent and allowing the cathode to cool off slightly, the ability of the cathode as an emitter of electrons can be estimated. This test is made in conjunction with the normal quality test.

To make the CATH ACT test, allow the tube under test to warm up, press button number 2 (fig. 2-1), and note the reading of scale number 2 on meter M301. Note also the numerical scale reading on M301. Next, lock down the CATH ACT button (fig. 2-2), wait for about 1.5 minutes, then press button number 2 (fig. 2-1) again and note the numerical and number 2 scale readings on meter M301. The tube should be replaced if the numerical reading on M301 differs from the first reading by more than 10 percent or if the reading is in the red area on the number 2 scale.

It is sometimes desirable to check certain tubes for shorts at a sensitivity greater than normal. To make the SENSITIVE GRID SHORTS test, push S302C (fig. 2-2) and note if any short test lamps (fig. 2-1) light.

HIGH-POWER HF AMPLIFIER TUBE TESTS

You normally test high-power amplifier tubes, which operate in the low-to-high frequency range, in the transmitter in which they are to be used. When you operate the tube in a transmitter, its condition can be determined by using built-in meters to measure the grid current, plate current, and power output and comparing those values with those obtained when using tubes known to be good.

Q-4. Normally, how are high-power rf tubes tested?

Klystron Tube Tests

You can check low-power klystron tubes for gas, frequency of the output signal, and output power by placing them in the equipment where they are to be used. You measure the beam current, output

frequency, and output power with the transmitter's built-in test equipment. You can check the output of klystrons used as receiver local oscillators by measuring the current in the crystal mixer unit.

Klystron tubes that remain inoperative for more than 6 months may become gassy. This condition occurs in klystrons installed in stored or spare equipment as well as in klystrons stored as stock supplies. Operation of a gassy klystron at its rated voltages will ionize the gas molecules and may cause excessive beam current to flow. This excessive beam current may shorten the life of the klystron or produce immediate failure. You can detect gas in a klystron tube by setting the applied reflector voltage to zero and slowly increasing the beam voltage while observing a meter that indicates the beam current - excessive beam current for a specific value of voltage indicates that the tube is gassy.

A gassy klystron tube can usually be restored to serviceable condition if you temporarily operate it at reduced beam voltage. Eight hours or more of reduced voltage operation may be required for klystrons that have been inoperative for periods in excess of 6 months.

The beam current is also an indication of the power output of the klystron. As klystrons age they normally draw less beam current; when this current decreases to a minimum value for a specific beam voltage, the tube must be replaced. You can usually determine the power output of transmitter klystrons by measuring the transmitter power output during equipment performance checks.

Q-5. What should you do if a klystron becomes gassy?

Traveling-Wave Tube

You can usually test a traveling-wave tube (twt) in the equipment in which it is used. When the twt is installed, you can usually measure the collector current and voltage and check the power output for various inputs. Any deviation greater than 10% from normal specifications may be considered to be an indication of a defective tube. Most amplifiers are supplied with built-in panel meters and selector switches so that the cathode, anode, helix, focus, and collector currents may be measured. Thus, continuous monitoring of amplifier operation and tube evaluation is possible. Adjustments usually are provided for you to set the helix, grid bias, and collector voltages for optimum operation. If variation of these controls will not produce normal currents and if all voltages are normal, you should consider the tube to be defective and replace it with a new tube or one known to be in good operating condition. To avoid needless replacement of tubes, however, you should make an additional check by measuring the input power and output power and determining the tube gain. If, with normal operating conditions, the gain level drops below the minimum indicated value in the equipment technical manual, the tube is defective.

Q-6. When used as an amplifier, what is the best indication that a twt is operating properly?

In the absence of special field-test sets, you may construct a laboratory test mock-up similar to that shown in figure 2-3. Because of the variations in power and gain between tubes and the large frequency ranges offered, we can illustrate only a general type of equipment. The equipment you select must have the proper range, impedance, and attenuation to make the test for a specific type of twt. To make gain measurements, you turn the switch shown in figure 2-3 to position 1 and set the precision attenuator to provide a convenient level of detector output. Then turn the switch to position 2 and insert attenuation until the detector output level is identical to that obtained without the twt in the circuit. The gain of the traveling-wave tube is equal to the amount of added attenuation.

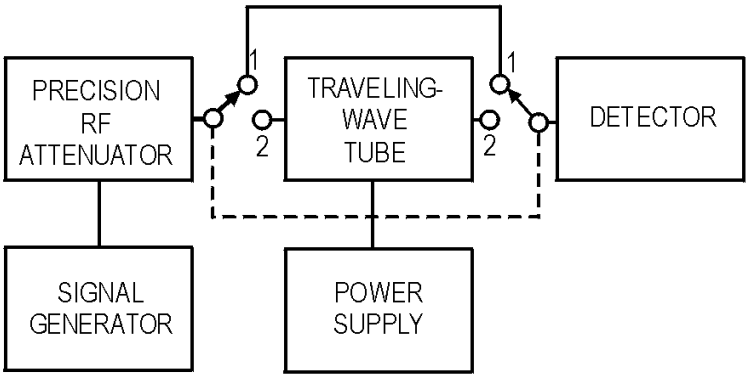

Figure 2-3.—Traveling-wave tube test arrangement.

When you use the twt as an oscillator, failure of the tube to break into oscillations when all other conditions are normal usually indicates a defective tube. In the case of a tube used as a receiving amplifier, an increase of noise with a normal or reduced output can indicate that the tube is failing but is still usable. All the general rules applying to klystron tubes mentioned previously are also applicable to the twt.

Magnetron Tube Tests

You test a magnetron tube while it is in the transmitter equipment in which it is to be used. When you install the magnetron in the transmitter, the condition of the tube can be determined by the normal plate-current measurement and the power, frequency spectrum, and standing-wave-ratio tests of the output signal. An unusual value for any of these measurements may indicate a defective tube.

Crossed-Field Amplifier

You usually test a crossed-field amplifier (cfa) tube while it is in the equipment in which it is used. Like the klystron, if you do not operate the cfa for more than a few months, the tube may become gassy. If a cfa tube is suspected of being gassy, we recommend that you consult the technical manual for the particular piece of equipment in which the crossed-field amplifier is used.

TESTING SEMICONDUCTORS

Unlike vacuum tubes, transistors are very rugged in that they can tolerate vibration and a rather large degree of shock. Under normal operating conditions, they will provide dependable operation for a long period of time. However, transistors are subject to failure when they are subjected to relatively minor overloads. Crystal detectors are also subject to failure or deterioration when subjected to electrical overloads and will deteriorate from a long period of normal use. To determine the condition of semiconductors, you can use various test methods. In many cases you may substitute a transistor of known good quality for a questionable one to determine the condition of a suspected transistor. This method is highly accurate and sometimes efficient. However, you should avoid indiscriminate substitution of semiconductors in critical circuits. When transistors are soldered into equipment, substitution becomes impractical - generally, you should test these transistors while they are in their circuits.

Q-7. What is the major advantage of a transistor over a tube?

Since certain fundamental characteristics indicate the condition of semiconductors, test equipment is available that allows you to test these characteristics with the semiconductors in or out of their circuits. Crystal-rectifier testers normally allow you to test only the forward-to-reverse current ratio of the crystal. Transistor testers, however, allow you to measure several characteristics, such as the collector leakage current ($_{Ic}$), collector to base current gain (β), and the four-terminal network parameters. The most useful test characteristic is determined by the type of circuit in which the transistor will be used. Thus, the alternating-current beta measurement is preferred for ac amplifier or oscillator applications; and for switching-circuit applications, a direct-current beta measurement may prove more useful.

Many common transistors are extremely heat sensitive. Excess heat will cause the semiconductor to either fail or give intermittent operation. You have probably experienced intermittent equipment problems and know them to be both time consuming and frustrating. You know, for example, that if a problem is in fact caused by heat, simply opening the equipment during the course of troubleshooting may cause the problem to disappear. You can generally isolate the problem to the faulty printed-circuit board (pcb) by observing the fault indications. However, to further isolate the problem to a faulty component, sometimes you must apply a minimal amount of heat to the suspect pcb by carefully using a low wattage, heat shrink gun; an incandescent drop light; or a similar heating device. Be careful not to overheat the pcb. Once the fault indication reappears, you can isolate the faulty component by spraying those components suspected as being bad with a nonconductive circuit coolant, such as Freon. If the alternate heating and cooling of a component causes it to operate intermittently, you should replace it.

Q-8. Name two major disadvantages of transistors.

TRANSISTOR TESTING

When trouble occurs in solid-state equipment, you should first check power supplies and perform voltage measurements, waveform checks, signal substitution, or signal tracing. If you isolate a faulty stage by one of these test methods, then voltage, resistance, and current measurements can be made to locate defective parts. When you make these measurements, the voltmeter impedance must be high enough that it exerts no appreciable effect upon the voltage being measured. Also, current from the ohmmeter you use must not damage the transistors. If the transistors are not soldered into the equipment, you should remove the transistors from the sockets during a resistance test. Transistors should be removed from or reinserted into the sockets only after power has been removed from the stage; otherwise damage by surge currents may result.

Transistor circuits, other than pulse and power amplifier stages, are usually biased so that the emitter current is from 0.5 milliampere to 3 milliamperes and the collector voltage is from 3 to 15 volts. You can measure the emitter current by opening the emitter connector and inserting a milliammeter in series. When you make this measurement, you should expect some change in bias because of the meter resistance. You can often determine the collector current by measuring the voltage drop across a resistor in the collector circuit and calculating the current. If the transistor itself is suspected, it can be tested by one or more of the methods described below.

Resistance Test

You can use an ohmmeter to test transistors by measuring the emitter-collector, base-emitter, and base-collector forward and reverse resistances. A back-to-forward resistance ratio on the order of 100 to 1 or greater should be obtained for the collector-to-base and emitter-to-base measurements. The forward and reverse resistances between the emitter and collector should be nearly equal. You should make all three measurements for each transistor you test, because experience has shown that transistors can develop shorts between the collector and emitter and still have good forward and reverse resistances for the other two measurements. Because of shunting resistances in transistor circuits, you will normally have

to disconnect at least two transistor leads from the associated circuit for this test. Exercise caution during this test to make certain that current during the forward resistance tests does not exceed the rating of the transistor — ohmmeter ranges requiring a current of more than 1 milliampere should not be used for testing transistors. Many ohmmeters are designed such that on the R × 1 range, 100 milliamperes or more can flow through the electronic part under test. For this reason, you should use a digital multimeter. Be sure you select a digital multimeter that produces enough voltage to properly bias the transistor junctions.

Q-9. When you are using an ohmmeter to test a transistor, what range settings should be avoided?

Transistor Testers

Laboratory transistor test sets are used in experimental work to test all characteristics of transistors. For maintenance and repair, however, it is not necessary to check all of the transistor parameters. A check of two or three performance characteristics is usually sufficient to determine whether a transistor needs to be replaced. Two of the most important parameters used for transistor testing are the transistor current gain (beta) and the collector leakage or reverse current (I_c).

The semiconductor test set (fig. 2-4) is a rugged, field type of tester designed to test transistors and semiconductor diodes. The set measures the beta of a transistor, resistance appearing at the electrodes, reverse current of a transistor or semiconductor diode, shorted or open conditions of a diode, forward transconductance of a field-effect transistor, and condition of its own batteries.

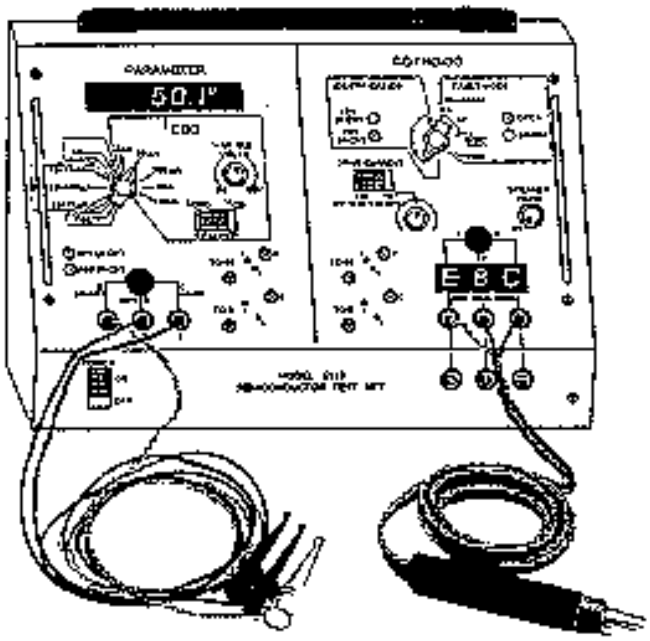

Figure 2-4.—Semiconductor test set.

In order to assure that accurate and useful information is gained from the transistor tester, the following preliminary checks of the tester should be made prior to testing any transistors.

With the POLARITY switch (fig. 2-4) in the OFF position, the meter pointer should indicate exactly zero. (When required, rotate the meter adjust screw on the front of the meter to fulfill this requirement.) When measurements are not actually being made, the POLARITY switch must always be left in the OFF position to prevent battery drain.

Always check the condition of the test set batteries by disconnecting the test set power cord, placing the POLARITY switch in the PNP position and placing the FUNCTION switch first to BAT.1, then to BAT.2. In both BAT positions the meter pointer should move so as to indicate within the red BAT range.

BETA MEASUREMENTS.—If the transistor is to be tested out of the circuit, plug it into the test jack located on the right-hand side below the meter shown in figure 2-4. If the transistor is to be tested in the circuit, it is imperative that at least 300 ohms exist between E-B, C-B, and C-E for accurate measurement. Initial settings of the test set controls are as follows:

1. FUNCTION switch to BETA
2. POLARITY switch to PNP or NPN (dependent on type of transistor under test)
3. RANGE switch to X10
4. Adjust METER ZERO for zero meter indication (transistor disconnected)

NOTE: The POLARITY switch should remain OFF while the transistor is connected to or disconnected from the test set. If you determine that the beta reading is less than 10, reset the RANGE switch to X1 and reset the meter to zero.

After connecting the yellow test lead to the emitter, the green test lead to the base, and the blue test lead to the collector, plug the test probe (not shown) into the jack located at the lower right-hand corner of the test set. When testing grounded equipment, unplug the 115 vac line cord and use battery operation. The beta reading is attained by multiplying the meter reading times the RANGE switch setting. Refer to the transistor characteristics book provided with the tester to determine if the reading is normal for the type of transistor under test.

ELECTRODE RESISTANCE MEASUREMENTS.—Connect the in-circuit probe test leads to the transistor with the yellow lead to the emitter, the green lead to the base, and the blue lead to the collector. Set the FUNCTION switch to the OHMS E-B position, and read the resistance between the emitter and base electrode on the center scale of the meter.

To read the resistance between the collector and base and the collector and emitter, set the FUNCTION switch to OHMS C-B and OHMS C-E. These in-circuit electrode resistance measurements are used to correctly interpret the in-circuit beta measurements. The accuracy of the BETA X1, X10 range is ±15 percent only when the emitter-to-base load is equal to or greater than 300 ohms.

I_c MEASUREMENTS.—Adjust the METER ZERO control for zero meter indication. Plug the transistor to be tested into the jack or connect test leads to the device under test. Set the PNP/NPN switch to correspond with the transistor under test. Set the FUNCTION switch to I_c and the RANGE switch to X0.1, X1, or X10 as specified by the transistor data book for allowable leakage. Read the amount of leakage on the bottom scale, and multiply this by the range setting figure as required.

DIODE MEASUREMENTS.—Diode qualitative in-circuit measurements are attained by connecting the green test lead to the cathode and the yellow test lead to the anode. Set the FUNCTION switch to DIODE IN/CKT and the RANGE switch to X1. (Ensure that the meter has been properly zeroed on this scale.) If the meter reads down scale, reverse the POLARITY switch. If the meter reads less than midscale, the diode under test is either open or shorted. The related circuit impedance of this test is less than 25 ohms.

PRECAUTIONS.—Transistors, although generally more rugged mechanically than electron tubes, are susceptible to damage by excessive heat and electrical overload. The following precautions should be taken in servicing transistorized equipment:

1. Test equipment and soldering irons must be checked to make certain that there is no leakage current from the power source. If leakage current is detected, isolation transformers must be used.

2. Ohmmeter ranges that require a current of more than 1 milliampere in the test circuit are not to be used for testing transistors.

3. Battery eliminators should not be used to furnish power for transistor equipment because they have poor voltage regulation and, possibly, high ripple voltage.

4. The heat applied to a transistor, when soldered connections are required, should be kept to a minimum by using a low-wattage soldering iron and heat shunts (such as long-nose pliers) on the transistor leads.

5. All circuits should be checked for defects before a transistor is replaced.

6. The power should be removed from the equipment before replacing a transistor or other circuit part.

7. When working on equipment with closely spaced parts, you will find that conventional test probes are often the cause of accidental short circuits between adjacent terminals. Momentary short circuits, which rarely cause damage to an electron tube, may ruin a transistor. To avoid accidental shorts, a test probe can be covered with insulation for all but a very short length of the tip.

Electrostatic Discharge Sensitive (ESDS) Care

Devices that are sensitive to electrostatic discharge (ESD) require special handling. You can readily identify ESD-sensitive (ESDS) devices by the symbols shown in figure 2-5. Static electricity is created whenever two substances (solid or fluid) are rubbed together or separated. The rubbing or separating of substances causes the transfer of electrons from one substance to the other; one substance then becomes positively charged, and the other becomes negatively charged. When either of these charged substances comes in contact with a grounded conductor, an electrical current flows until that substance is at the same electrical potential as ground.

Figure 2-5.—Warning symbols for ESDS devices.

You commonly experience static build-up during the winter months when you walk across a vinyl or carpeted floor. (Synthetics, especially plastics, are excellent generators of static electricity.) If you then touch a doorknob or any other conductor, an electrical arc to ground may result, and you may receive a slight shock. For you to experience such a shock, the electrostatic potential created must be 3,500 to 4,000 volts. Lesser voltages, although present and similarly discharged, normally are not apparent to your nervous system. Some typical measured static charges caused by various actions are shown in table 2-1.

Table 2-1.—Typical Measured Static Charges (in volts)

ITEM	RELATIVE HUMIDITY	
	LOW (10 - 20%)	HIGH (65 - 90%)
WALKING ACROSS CARPET	35,000V	1,500V
WALKING OVER VINYL FLOOR	12,000V	250V
WORKER AT BENCH	6,000V	100V
VINYL ENVELOPES FOR WORK INSTRUCT.	7,000V	600V
POLY BAG PICKED UP FROM BENCH	20,000V	1,200V
WORK CHAIR PADDED WITH URETHANE FORM	18,000 V	1,500 V

Q-10. At approximately what minimum voltage potential should you be able to feel an electrostatic discharge?

Metal oxide semiconductor (MOS) devices are the most susceptible to damage from ESD. For example, an MOS field-effect transistor (MOSFET) can be damaged by a static voltage potential of as little as 35 volts. Commonly used discrete bipolar transistors and diodes (often used in ESD-protective circuits), although less susceptible to ESD, can be damaged by voltage potentials of less than 3,000 electrostatic volts. Damage does not always result in sudden device failure but sometimes results in device degradation and early failure. Table 2-1 clearly shows that electrostatic voltages well in excess of

3,000 volts can be easily generated, especially under low-humidity conditions. ESD damage of ESDS parts or circuit assemblies is possible whenever two or more pins of any of these devices are electrically exposed or have low impedance paths. Similarly, an ESDS device in a printed-circuit board or even in another pcb that is electrically connected in a series can be damaged if it provides a path to ground. ESD damage can occur during the manufacture of equipment or during the servicing of the equipment. Damage can occur anytime devices or assemblies are handled, replaced, tested, or inserted into a connector.

Q-11. A MOSFET can be damaged by an electrostatic discharge at approximately what minimum potential?

ESD-sensitive devices can be grouped by their sensitivity to ESD. Semiconductors fall within the following categories:

- VERY SENSITIVE DEVICES. These include MOS and CMOS devices without input diode protection circuitry on all input circuits; dielectrically isolated semiconductors with internal capacitor contacts connected to external pins; and microcircuits using N + guard-ring construction (with metalization crossing over the guard ring).

- SENSITIVE DEVICES. These include all low-power Schottky-barrier and Schottky-TTL devices; all ECL devices; high input-impedance linear microcircuits; all small-signal transistors that operate at 500 MHz or higher; all discrete semiconductors that use silicon dioxide to insulate metal paths over other active areas; MOS or CMOS devices with input diode protection on all input terminals; junction field-effect transistors; and precision resistive networks.

- MODERATELY SENSITIVE DEVICES. These include all microcircuits and small-signal discrete semiconductors with less than 10 watts dissipation at 25º C, and thick-film resistors.

The following procedure is an example of some of the protective measures used to prevent ESD damage:

1. Before servicing equipment, you should be grounded to discharge any static electricity from your body. This can be accomplished with the use of a test lead (a single-wire conductor with a series resistance of 1 megohm) equipped with alligator clips on each end. After the equipment has been completely de-energized, one clip end is connected to the grounded equipment frame; the other clip end is touched with your bare hand. Figure 2-6 shows a more refined ground strap, which frees both hands for work.

   NOTE: When wearing a wrist strap, you should *never use ac-powered test equipment* because of your increased chance of receiving an electrical shock.

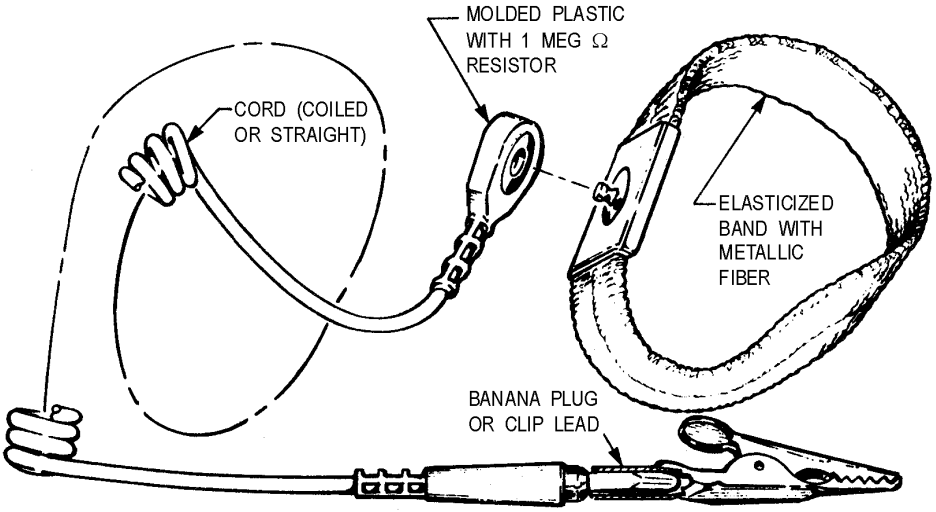

Figure 2-6.—ESD wrist strap.

2. Equipment technical manuals and packaging material should be checked for ESD warnings and instructions.

3. Prior to opening an electrostatic unit package of an ESDS device or assembly, clip the free end of the grounded test lead to the package. This will cause any static electricity that may have built up on the package to discharge. The other end remains connected to the equipment frame or other ESD ground. Keep the unit package grounded until the replacement device or assembly is placed in the unit package.

4. Minimize handling of ESDS devices and assemblies. Keep replacement devices or assemblies, with their connector-shorting bars, clips, and so forth, intact in their electrostatic-free packages until needed. Place removed repairable ESDS devices or assemblies, with their connector shorting bars or clips installed, in electrostatic-free packages as soon as they are removed from the equipment. ESDS devices or assemblies should be transported and stored only in protective packaging.

5. Always avoid unnecessary physical movement, such as scuffing the feet, when handling ESDS devices or assemblies. Such movement will generate additional charges of static electricity.

6. When removing or replacing an ESDS device or assembly in the equipment, hold the device or assembly through the electrostatic-free wrap if possible. Otherwise, pick up the device or assembly by its body only. DO NOT TOUCH component leads, connector pins, or any other electrical connections or paths on boards, even though they are covered by conformal coating.

7. Do not permit ESDS devices or assemblies to come in contact with clothing or other ungrounded materials that could have an electrostatic charge. The charges on a nonconducting material are not equal. A plastic storage bag may have a –10,000 volt potential one-half inch from a +15,000 volt potential, with many other such charges all over the bag. Placing a circuit card inside the bag allows the charges to equalize through the pcb conductive paths and components, thereby causing failures. Do not hand an ESDS device or assembly to another person until the device or assembly is protectively packaged.

8. When moving an ESDS device or assembly, always touch (with your bare skin) the surface on which it rests for at least 1 second before picking it up. Before placing it on any surface, touch the

surface with your free hand for at least 1 second. The bare skin contact provides a safe discharge path for electrostatic charges accumulated while you are moving around.

9. While servicing equipment containing ESDS devices, do not handle or touch materials such as plastic, vinyl, synthetic textiles, polished wood, fiber glass, or similar items that could create static charges; or, be sure to repeat the grounding action with the bare hands after contacting these materials. These materials are prime electrostatic generators.

10. If possible, avoid repairs that require soldering at the equipment level. Soldering irons must have heater and tip assemblies grounded to ac electrical ground. Do not use ordinary plastic solder suckers (special antistatic solder suckers are commercially available).

11. Ground the leads of test equipment momentarily before you energize the test equipment and before you probe ESDS items.

Q-12. Why should you avoid using ac-powered test equipment when wearing a wrist strap?

DIODE TESTING

Because of the reliability of semiconductor devices, servicing techniques developed for transistorized equipment differ from those used for electron-tube circuits. Electron tubes are usually considered to be the circuit component most susceptible to failure and are normally the first to be tested. Transistors, however, are capable of operating in excess of 30,000 hours at maximum ratings without appreciable degradation. They are often soldered into equipment in the same manner as resistors and capacitors. Substitution of a diode or transistor known to be in good condition is a simple method of determining the quality of a questionable semiconductor device. You should use this technique only after voltage and resistance measurements indicate that no circuit defect exists that might damage the substituted semiconductor device. If more than one defective semiconductor is present in the equipment section where trouble has been localized, substitution becomes cumbersome since several semiconductors may have to be replaced before the trouble is corrected. To determine which stages failed and which semiconductors are not defective, you must test all of the removed semiconductors. This can be accomplished by observing whether the equipment operates correctly as each of the removed semiconductor devices is reinserted into the equipment.

Q-13. Prior to substituting a diode, what measurements should you take to determine its condition?

DIODE TESTERS

Diodes, such as general-purpose germanium and silicon diodes, power silicon diodes, and microwave silicon diodes, are most effectively tested under actual operating conditions. However, rectifier testers are available for you to determine direct-current characteristics that provide an indication of diode quality.

Rf Diode Test

A common type of diode test set is a combination ohmmeter-ammeter. You can make measurements of forward resistance, back resistance, and reverse current with this equipment. You can determine the condition of the rectifier under test by comparing its actual values with typical values obtained from test information furnished with the test set or from the manufacturer's data sheets. Comparing the diode's back and forward resistance at a specified voltage provides you with a rough indication of the rectifying property of a diode. A typical back-to-forward resistance ratio is on the order of 10 to 1, and a forward-resistance value of 50 to 80 ohms is common.

Switching Diode Test

To effectively test diodes used for computer applications, you must obtain back-resistance measurements at a large number of different voltage levels. This can be done efficiently by using a dynamic diode tester in conjunction with an oscilloscope, which is used to display the diode's back-current-versus-voltage curve. You can easily interpret diode characteristics, such as flutter, hysteresis, and negative resistance, through use of the dynamic current and voltage display.

DIODE CHARACTERISTIC GRAPHICAL DISPLAY

You can use an oscilloscope to graphically display the forward- and back-resistance characteristics of a diode. A test circuit used in conjunction with an oscilloscope is shown in figure 2-7. This circuit uses an audio-signal generator as the test signal. It should be adjusted for an approximate 2-volt, 60-hertz signal, as measured across R1.

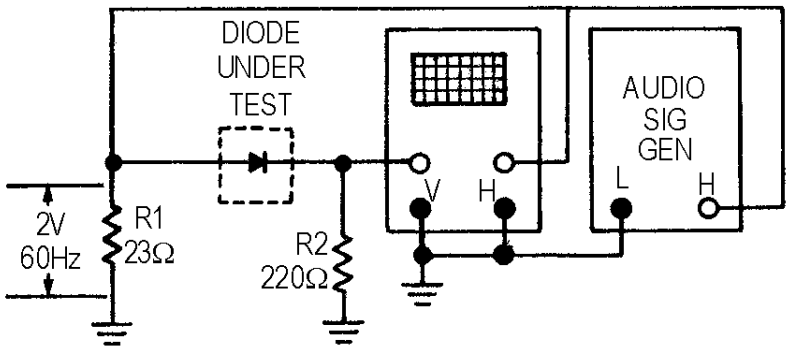

Figure 2-7.—Display circuit used with an oscilloscope.

The test signal you apply to the diode is also connected to the horizontal input of the oscilloscope. The horizontal sweep will then display the voltage applied to the diode under test. The voltage developed across current-measuring resistor R2 is applied to the vertical input of the oscilloscope. Since this voltage is proportional to the current through the diode under test, the vertical deflection will indicate diode current. The resulting oscilloscope trace will be similar to the curve shown in figure 2-8.

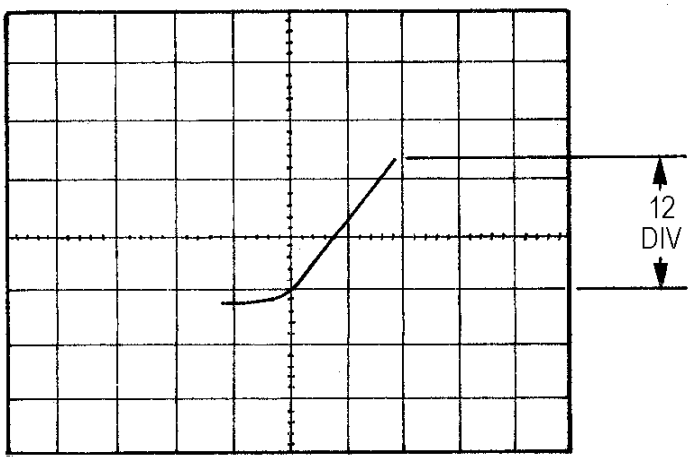

Figure 2-8.—Typical characteristic curve of a silicone diode.

Reverse Voltage-Current Analysis

You can make an analysis of the reverse voltage-current portion of the characteristic curve for a diode with the method described above or with a diode test set. This test is very important for diodes used in computer applications, where stability of operation is essential. Various diode conditions that may be detected by this test are shown in figure 2-9, view A, view B, view C, and view D.

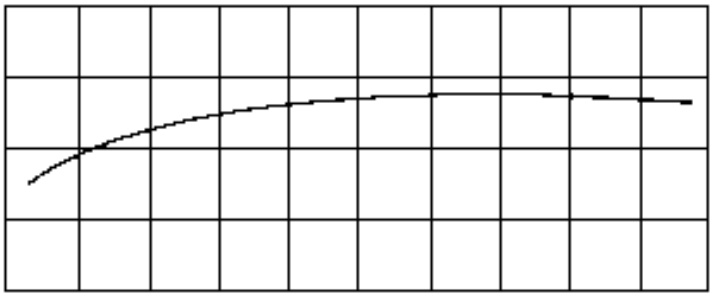

(A)

GOOD DIODE TRACE

Figure 2-9A.—Diode reverse current-voltage characteristics. GOOD DIODE TRACE.

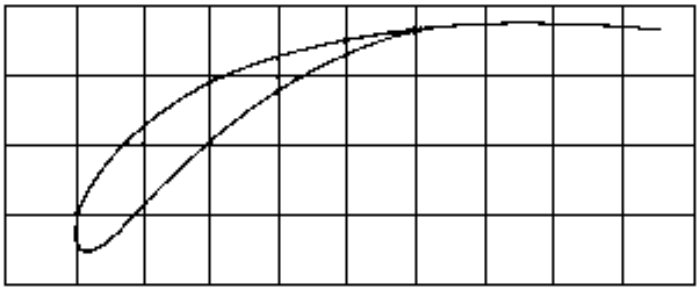

(B)

HYSTERESIS CHARACTERISTIC

Figure 2-9B.—Diode reverse current-voltage characteristics. HYSTERESIS CHARACTERISTIC.

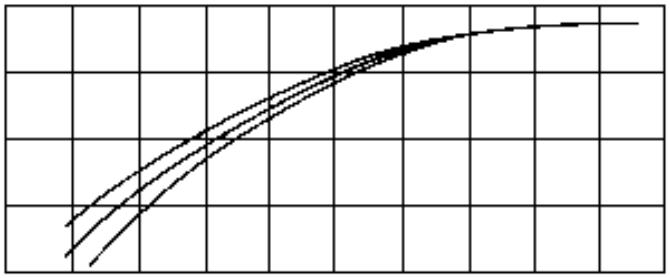

(C)

FLUTTER (OR DRIFT) CHARACTERISTIC

Figure 2-9C.—Diode reverse current-voltage characteristics. FLUTTER (OR DRIFT) CHARACTERISTIC.

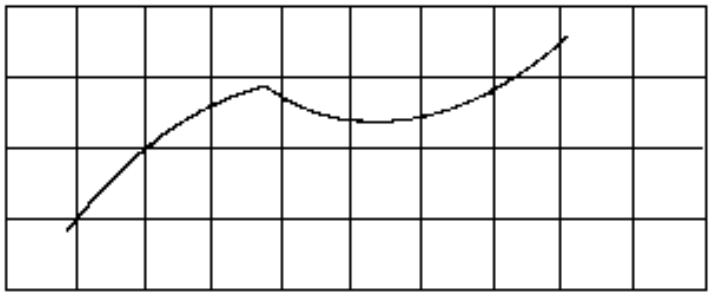

(D)

NEGATIVE RESISTANCE TRACE

Figure 2-9D.—Diode reverse current-voltage characteristics. NEGATIVE RESISTANCE TRACE.

Zener Diode Test

An audio signal generator may not be able to produce a high enough voltage for you to test Zener diodes. You can, however, make this test with a diode test set or with the circuit shown in figure 2-10. In this circuit, R1 is used to adjust the input voltage to a suitable value for the Zener diode being tested. Resistor R2 limits the current through the diode. The signal voltage applied to the diode is also connected to the horizontal input of the oscilloscope. The voltage developed across current-measuring resistor R3 is applied to the vertical input of the oscilloscope. The horizontal sweep will therefore represent the applied voltage, and the vertical deflection will indicate the current through the diode under test. Figure 2-11 shows the characteristic pattern of a Zener diode (note the sharp increase in current at the avalanche breakdown point). For the Zener diode to be acceptable, this voltage must be within the limits specified by the manufacturer.

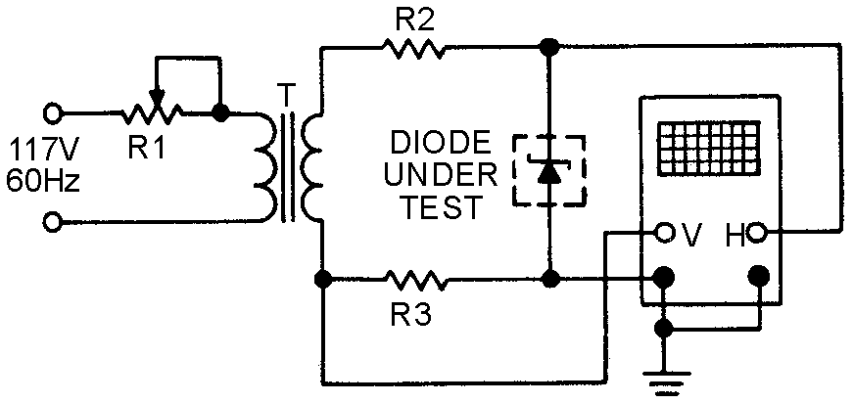

Figure 2-10.—Zener diode test circuit.

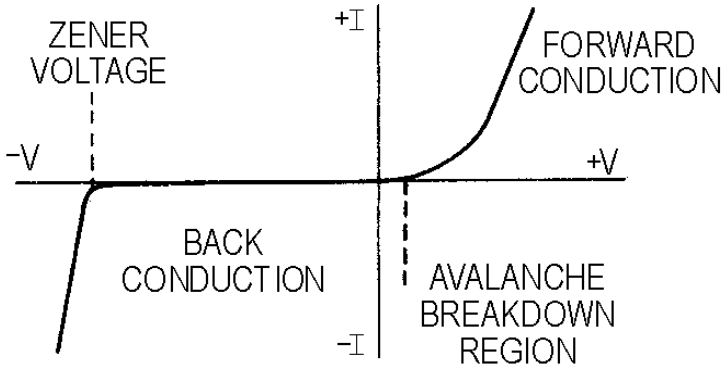

Figure 2-11.—Zener diode characteristic pattern.

STATIC RESISTANCE MEASUREMENTS

One convenient method of testing a diode requires only your ohmmeter. The forward and back resistances can be measured at a voltage determined by the battery potential of the ohmmeter and the resistance range at which the meter is set. When the test leads of the ohmmeter are connected to the diode, a resistance will be measured that is different from the resistance indicated if the leads are reversed. The smaller value is called the forward resistance, and the larger value is called the back resistance. If the ratio of back-to-forward resistance is greater than 10 to 1, the diode should be capable of functioning as a rectifier. This is a very limited test, which does not take into account the action of the diode at voltages of

different magnitudes and frequencies. Some diodes may be damaged by the excessive current produced by some range settings of a standard multimeter. Therefore, you should use a digital multimeter when performing this measurement.

Q-14. As a rule of thumb, what is an acceptable ratio of back-to-forward resistance for a diode?

SILICON-CONTROLLED RECTIFIERS (SCR)

Many naval electronic equipments use silicon-controlled rectifiers (SCRs) for the control of power. Like other solid-state components, SCRs are subject to failure. You can test most SCRs with a standard ohmmeter, but you must understand just how the SCR functions.

As shown in figure 2-12, the SCR is a three-element, solid-state device in which the forward resistance can be controlled. The three active elements shown in the figure are the anode, cathode, and gate. Although they may differ in outward appearance, all SCRs operate in the same way. The SCR acts like a very high-resistance rectifier in both forward and reverse directions without requiring a gate signal. However, when the correct gate signal is applied, the SCR conducts only in the forward direction, the same as any conventional rectifier. To test an SCR, you connect an ohmmeter between the anode and cathode, as shown in figure 2-12. Start the test at R × 10,000 and reduce the value gradually. The SCR under test should show a very high resistance, regardless of the ohmmeter polarity. The anode, which is connected to the positive lead of the ohmmeter, must now be shorted to the gate. This will cause the SCR to conduct; as a result, a low-resistance reading will be indicated on the ohmmeter. Removing the anode-to-gate short will not stop the SCR from conducting; but removing either of the ohmmeter leads will cause the SCR to stop conducting — the resistance reading will then return to its previous high value. Some SCRs will not operate when you connect an ohmmeter. This is because the ohmmeter does not supply enough current. However, most of the SCRs in Navy equipment can be tested by the ohmmeter method. If an SCR is sensitive, the R × 1 scale may supply too much current to the device and damage it. Therefore, try testing it on the higher resistance scales.

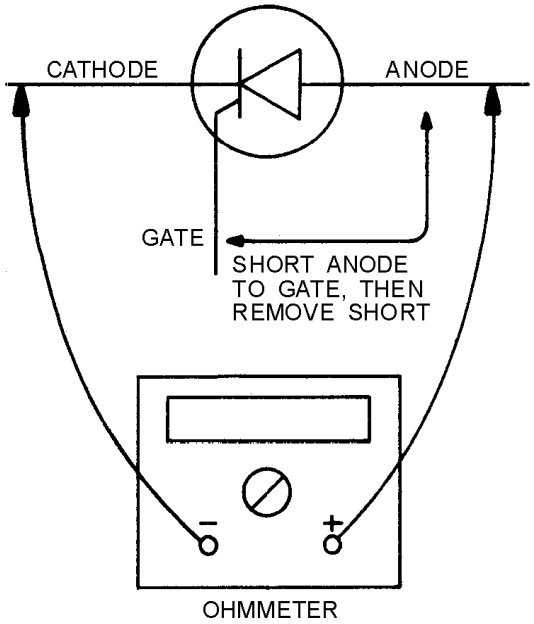

Figure 2-12.—Testing an SCR with an ohmmeter.

Q-15. When testing an SCR with an ohmmeter, the SCR will conduct if what two elements are shorted together?

TRIAC

Triac is General Electric's trade name for a silicon, gate-controlled, full-wave, ac switch, as shown in figure 2-13. The device is designed to switch from a blocking state to a conducting state for either polarity of applied voltages and with either positive or negative gate triggering. Like a conventional SCR, the Triac is an excellent solid-state device for controlling current flow. You can make the Triac conduct by using the same method used for an SCR, but the Triac has the advantage of being able to conduct equally well in either the forward or reverse direction.

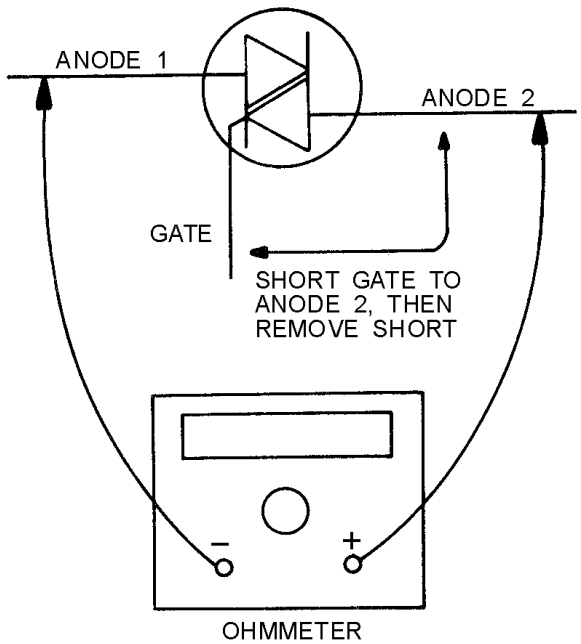

Figure 2-13.—Testing a Triac with an ohmmeter.

To test the Triac with an ohmmeter (R × 1 scale), you connect the ohmmeter's negative lead to anode 1 and the positive lead to anode 2, as shown in figure 2-13. The ohmmeter should indicate a very high resistance. Short the gate to anode 2; then remove it. The resistance reading should drop to a low value and remain low until either of the ohmmeter leads is disconnected from the Triac. This completes the first test.

The second test involves reversing the ohmmeter leads between anodes 1 and 2 so that the positive lead is connected to anode 1 and the negative lead is connected to anode 2. Again, short the gate to anode 2; then remove it. The resistance reading should again drop to a low value and remain low until either of the ohmmeter leads is disconnected.

Q-16. When a Triac is properly gated, what is/are the direction(s) of current flow between anodes 1 and 2?

UNIJUNCTION TRANSISTORS (UJTs)

The unijunction transistor (UJT), shown in figure 2-14, is a solid-state, three-terminal semiconductor that exhibits stable open-circuit, negative-resistance characteristics. These characteristics enable the UJT

to serve as an excellent oscillator. Testing a UJT is a relatively easy task if you view the UJT as being a diode connected to the junction of two resistors, as shown in figure 2-15. With an ohmmeter, measure the resistance between base 1 and base 2; then reverse the ohmmeter leads and take another reading. Readings should show the same high resistance regardless of meter lead polarity. Connect the negative lead of the ohmmeter to the emitter of the UJT. Using the positive lead, measure the resistance from the emitter to base 1 and then from the emitter to base 2. Both readings should indicate high resistances that are approximately equal to each other. Disconnect the negative lead from the emitter and connect the positive lead to it. Using the negative lead, measure the resistance from the emitter to base 1 and then from the emitter to base 2. Both readings should indicate low resistances approximately equal to each other.

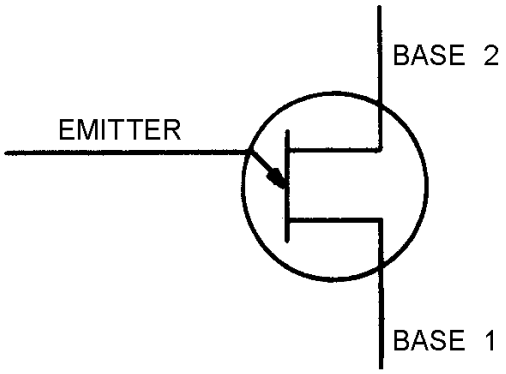

Figure 2-14.—Unijunction transistor.

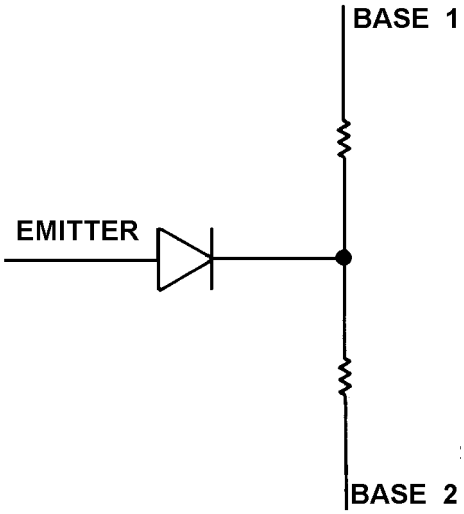

Figure 2-15.—Unijunction transistor equivalent circuit.

JUNCTION FIELD-EFFECT TRANSISTOR (JFET) TESTS

The junction field-effect transistor (JFET) has circuit applications similar to those of a vacuum tube. The JFET has a voltage-responsive characteristic with a high input impedance. Two types of JFETs that you should become familiar with are the junction p-channel and the junction n-channel types, as shown in figure 2-16. Their equivalent circuits are shown in figures 2-17 and 2-18, respectively. The only difference in your testing of these two types of JFETs involves the polarity of the meter leads.

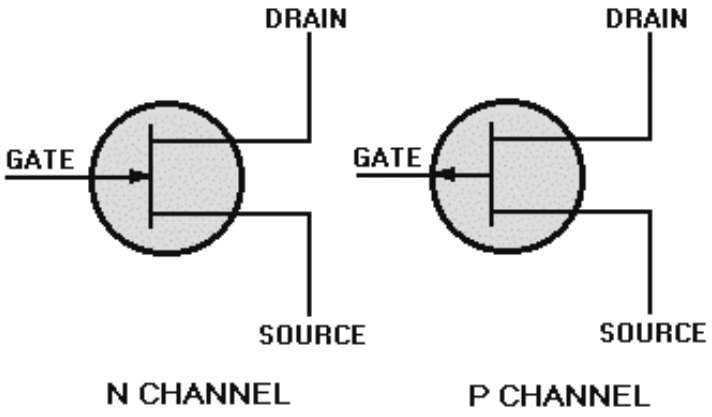

Figure 2-16.—Junction FETs.

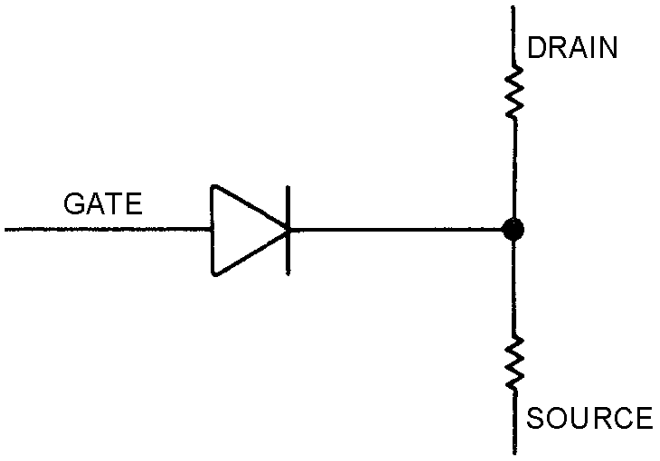

Figure 2-17.—N-channel JFET equivalent circuit.

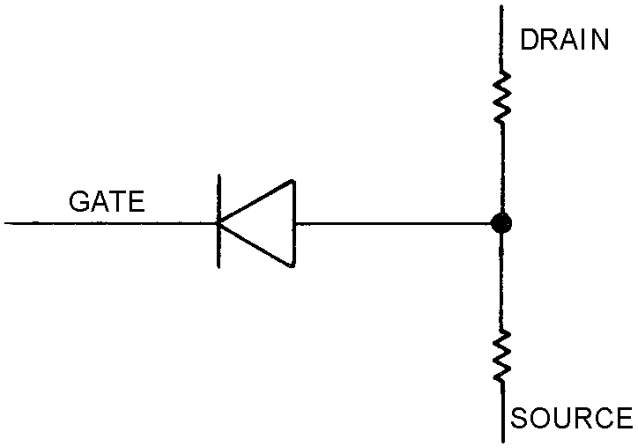

Figure 2-18.—P-channel JFET equivalent circuit.

N-Channel Test

Using an ohmmeter set to the R × 100 scale, measure the resistance between the drain and the source; then reverse the ohmmeter leads and take another reading. Both readings should be equal (in the 100- to 10,000-ohm range), regardless of the meter lead polarity. Connect the positive meter lead to the gate. Using the negative lead, measure the resistance between the gate and the drain; then measure the resistance between the gate and the source. Both readings should indicate a low resistance and be approximately the same. Disconnect the positive lead from the gate and connect the negative lead to the gate. Using the positive lead, measure the resistance between the gate to the drain; then measure the resistance between the gate and the source. Both readings should show infinity.

P-Channel Test

Using an ohmmeter set to the R × 100 scale, measure the resistance between the drain and the source; then reverse the ohmmeter leads and take another reading. Both readings should be the same (100 to 10,000 ohms), regardless of meter lead polarity. Next, connect the positive meter lead to the gate. Using the negative lead, measure the resistance between the gate and the drain; then measure it between the gate and the source. Both readings should show infinity. Disconnect the positive lead from the gate and connect the negative lead to the gate. Using the positive lead, measure the resistance between the gate and the drain; then measure it between the gate and the source. Both readings should indicate a low resistance and be approximately equal.

MOSFET TESTING

Another type of semiconductor you should become familiar with is the metal oxide semiconductor field-effect transistor (MOSFET), as shown in figures 2-19 and 2-20. You must be extremely careful when working with MOSFETs because of their high degree of sensitivity to static voltages. As previously mentioned in this chapter, the soldering iron should be grounded. A metal plate should be placed on the workbench and grounded to the ship's hull through a 250-kilohm to 1-megohm resistor. You should also wear a bracelet with an attached ground strap and ground yourself to the ship's hull through a 250-kilohm to 1-megohm resistor. You should not allow a MOSFET to come into contact with your clothing, plastics, or cellophane-type materials. A vacuum plunger (solder sucker) must not be used because of the high electrostatic charges it can generate. Solder removal by wicking is recommended. It is also good practice to wrap MOSFETs in metal foil when they are out of a circuit. To ensure MOSFET safety under test, use a portable volt-ohm-milliammeter (vom) to make MOSFET resistance measurements. **A vtvm must never be used in testing MOSFETs.** You must be aware that while you are testing a MOSFET, you are grounded to the ship's hull or station's ground. Use of a vtvm would cause a definite safety hazard because of the 115-volt, 60-hertz power input. When the resistance measurements are complete and the MOSFET is properly stored, unground both the plate on the workbench and yourself. You will understand MOSFET testing better if you visualize it as equivalent to a circuit using diodes and resistors, as shown in figures 2-21 and 2-22.

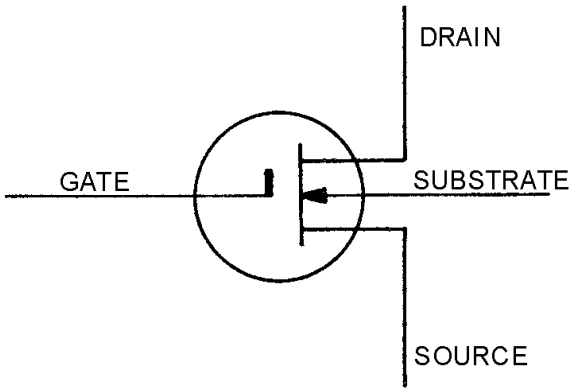

Figure 2-19.—MOSFET (depletion/enhancement type).

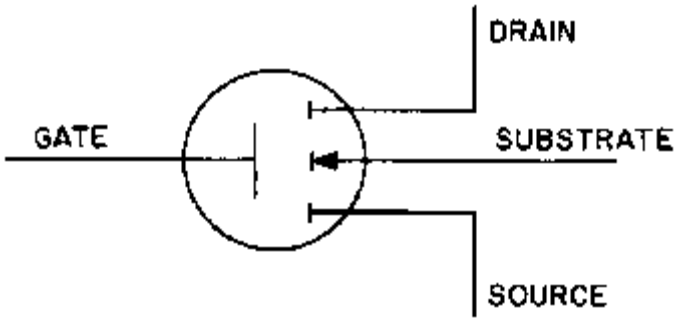

Figure 2-20.—MOSFET (enhancement type).

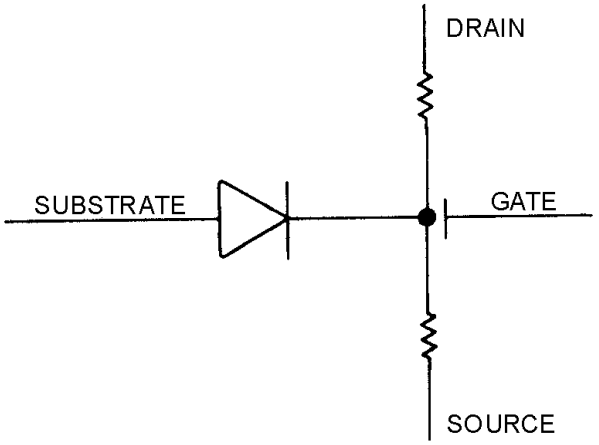

Figure 2-21.—MOSFET (depletion/enhancement type) equivalent circuit.

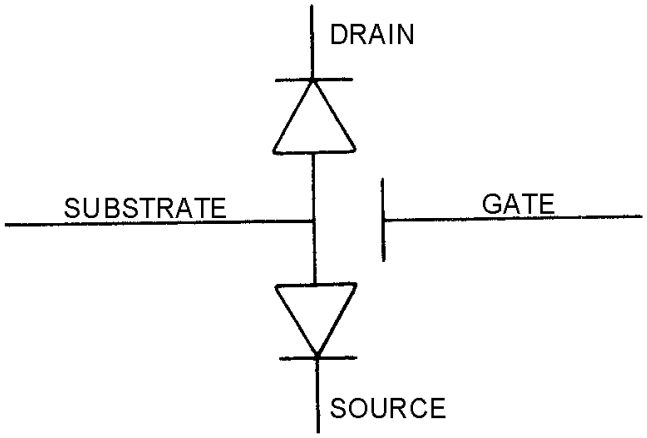

Figure 2-22.—MOSFET (enhancement type) equivalent circuit.

Q-17. Why is it not advisable to use a solder sucker when working on MOSFETs?

MOSFET (Depletion/Enhancement Type) Test

Using an ohmmeter set to the R × 100 scale, measure the resistance between the MOSFET drain and the source; then reverse the ohmmeter leads and take another reading. The readings should be equal, regardless of meter lead polarity. Connect the positive lead of the ohmmeter to the gate. Using the negative lead, measure the resistance between the gate and the drain and between the gate and the source. Both readings should show infinity. Disconnect the positive lead from the gate and connect the negative lead to the gate. Using the positive lead, measure the resistance between the gate and the drain; then measure it between the gate and the source. Both readings should show infinity. Disconnect the negative lead from the gate and connect it to the substrate. Using the positive lead, measure the resistance between the substrate and the drain and between the substrate and the source. Both of these readings should indicate infinity. Disconnect the negative lead from the substrate and connect the positive lead to the substrate. Using the negative lead, measure the resistance between the substrate and the drain and between the substrate and the source. Both readings should indicate a low resistance (about 1,000 ohms).

MOSFET (Enhancement Type) Test

Using an ohmmeter set to the R × 100 scale, measure the resistance between the drain and the source; then reverse the leads and take another reading between the drain and the source. Both readings should show infinity, regardless of meter lead polarity. Connect the positive lead of the ohmmeter to the gate. Using the negative lead, measure the resistance between the gate and the drain and then between the gate and the source. Both readings should indicate infinity. Disconnect the positive lead from the gate and connect the negative lead to the gate. Using the positive lead, measure the resistance between the gate and the drain and then between the gate and the source. Both readings should indicate infinity. Disconnect the negative lead from the gate and connect it to the substrate. Using the positive lead, measure the resistance between the substrate and the drain and between the substrate and the source. Both readings should indicate infinity. Disconnect the negative lead from the substrate and connect the positive lead to the substrate. Using the negative lead, measure the resistance between the substrate and the drain and between the substrate and the source. Both readings should indicate a low resistance (about 1,000 ohms).

INTEGRATED CIRCUIT (IC) TESTING

Integrated circuits (ICs) constitute an area of microelectronics in which many conventional electronic components are combined into high-density modules. Integrated circuits are made up of active and passive components, such as transistors, diodes, resistors, and capacitors. Because of their reduced size, use of integrated circuits can simplify otherwise complex systems by reducing the number of separate components and interconnections. Their use can also reduce power consumption, reduce the overall size of the equipment, and significantly lower the overall cost of the equipment concerned. Many types of integrated circuits are ESDS devices and should be handled accordingly.

Q-18. Name two advantages in using ICs.

Your IC testing approach needs to be somewhat different from that used in testing vacuum tubes and transistors. The physical construction of ICs is the prime reason for this different approach. The most frequently used ICs are manufactured with either 14 or 16 pins, all of which may be soldered directly into the circuit. It can be quite a job for you to unsolder all of these pins, even with the special tools designed for this purpose. After unsoldering all of the pins, you then have the tedious job of cleaning and straightening all of them.

Although there are a few IC testers on the market, their applications are limited. Just as transistors must be removed from the circuit to be tested, some ICs must also be removed to permit testing. When ICs are used in conjunction with external components, the external components should first be checked for proper operation. This is particularly important in linear applications where a change in the feedback of a circuit can adversely affect operating characteristics of the component.

Any linear (analog) IC is sensitive to its supply voltage. This is especially the case among ICs that use bias and control voltages in addition to a supply voltage. If you suspect a linear IC of being defective, all voltages coming to the IC must be checked against the manufacturer's circuit diagram of the equipment for any special notes on voltages. The manufacturer's handbook will also give you recommended voltages for any particular IC.

When troubleshooting ICs (either digital or linear), you cannot be concerned with what is going on inside the IC. You cannot take measurements or conduct repairs inside the IC. You should, therefore, consider the IC as a black box that performs a certain function. You can check the IC, however, to see that it can perform its design functions. After you check static voltages and external components associated with the IC, you can check it for dynamic operation. If it is intended to function as an amplifier, then you can measure and evaluate its input and output. If it is to function as a logic gate or combination of gates, it is relatively easy for you to determine what inputs are required to achieve a desired high or low output. Examples of different types of ICs are provided in figure 2-23.

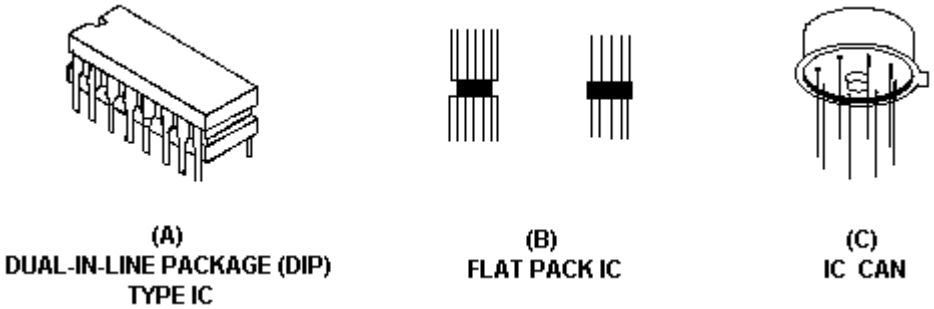

Figure 2-23.—Types of ICs.

Q-19. Why should you consider an IC as a black box?

Digital ICs are relatively easy for you to troubleshoot and test because of the limited numbers of input/output combinations involved. When using positive logic, the logic state of the inputs and outputs of a digital IC can only be represented as either a high (also referred to as a 1 state) or as a low (also referred to as a 0 state). In most digital circuitry, a high is a steady 5-vdc level, and a low is a 0-vdc level. You can readily determine the logic state of an IC by using high-input-impedence measuring devices, such as an oscilloscope. Because of the increased use of ICs in recent years, numerous pieces of test equipment have been designed specifically for testing ICs. They are described in the following paragraphs.

Q-20. What are the two logic states of an IC?

LOGIC CLIPS

Logic clips, as shown in figure 2-24, are spring-loaded devices that are designed to clip onto a dual-in-line package IC while the IC is mounted in its circuit. It is a simple device that usually has 16 light emitting diodes (LEDs) mounted at the top of the clips. The LEDs correspond to the individual pins of the IC, and any lit LED represents a high logic state. An unlit LED represents a low logic state. Logic clips require no external power connections, and they are small and lightweight. Their ability to simultaneously monitor the input and output of an IC is very helpful when you are troubleshooting a logic circuit.

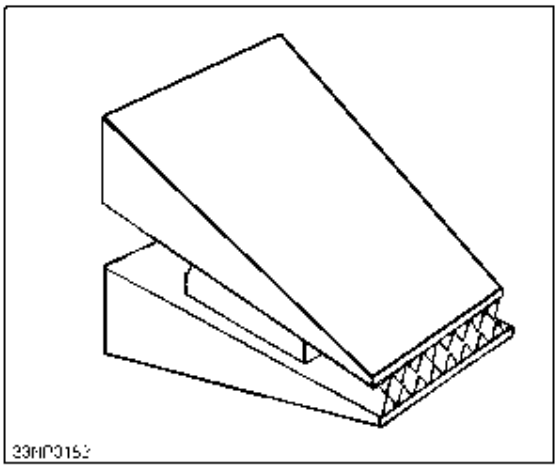

Figure 2-24.—Logic clip.

Q-21. A lighted LED on a logic clip represents what logic level?

LOGIC COMPARATORS

The logic comparator, as shown in figure 2-25, is designed to detect faulty, in-circuit-DIP ICs by comparing them with ICs that are known to be good (reference ICs). The reference IC is mounted on a small printed-circuit board and inserted into the logic comparator. You then attach the logic comparator to the IC under test by a test lead, which is connected to a spring-loaded device similar in appearance to a logic clip. The logic comparator is designed to detect differences in logic states of the reference IC and the IC being tested. If any difference in logic states does exist on any pin, an LED corresponding to the pin in question will be lit on the logic comparator. The logic comparator is powered by the IC under test.

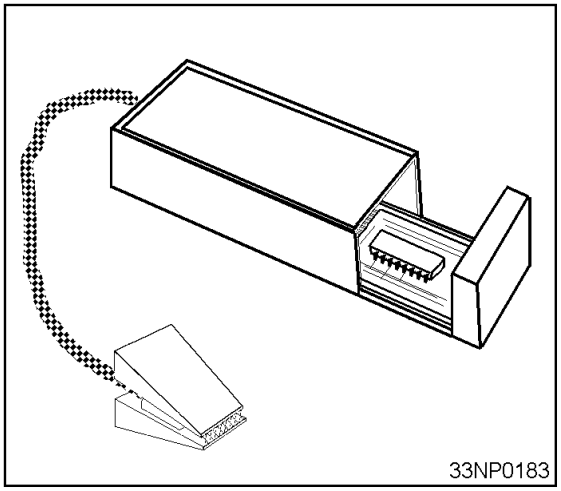

Figure 2-25.—Logic comparator.

Q-22. What does a lighted LED indicate on a logic comparator?

LOGIC PROBES

Logic probes, as shown in figure 2-26, are extremely simple and useful devices that are designed to help you detect the logic state of an IC. Logic probes can show you immediately whether a specific point in the circuit is **low, high, open,** or **pulsing**. A **high** is indicated when the light at the end of the probe is lit and a **low** is indicated when the light is extinguished. Some probes have a feature that detects and displays high-speed transient pulses as small as 5 nanoseconds wide. These probes are usually connected directly to the power supply of the device being tested, although a few also have internal batteries. Since most IC failures show up as a point in the circuit stuck either at a **high** or **low** level, these probes provide a quick, inexpensive way for you to locate the fault. They can also display that single, short-duration pulse that is so hard to catch on an oscilloscope. The ideal logic probe will have the following characteristics:

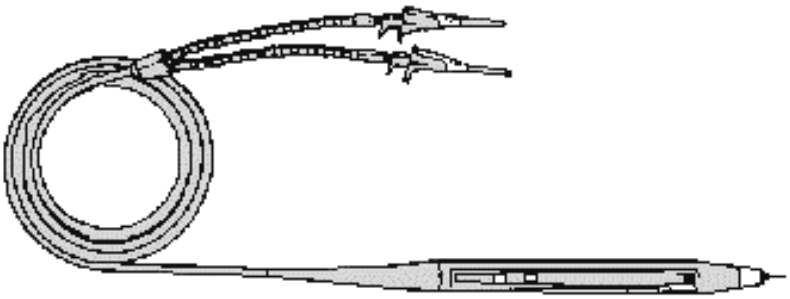

Figure 2-26.—Logic probe.

1. Be able to detect a steady logic level
2. Be able to detect a train of logic levels
3. Be able to detect an open circuit
4. Be able to detect a high-speed transient pulse

5. Have overvoltage protection

6. Be small, light, and easy to handle

7. Have a high input impedance to protect against circuit loading

Q-23. What is the purpose of a logic probe?

LOGIC PULSERS

Another extremely useful device for troubleshooting logic circuits is the logic pulser. It is similar in shape to the logic probe and is designed to inject a logic pulse into the circuit under test. Logic pursers are generally used in conjunction with a logic clip or a logic probe to help you trace the pulse through the circuit under test or verify the proper operation of an IC. Some logic pursers have a feature that allows a single pulse injection or a train of pulses. Logic pursers are usually powered by an external dc power supply but may, in some cases, be connected directly to the power supply of the device under test. View A of figure 2-27 shows a typical logic pulser. View B shows a logic pulser (right) used with a logic probe (left).

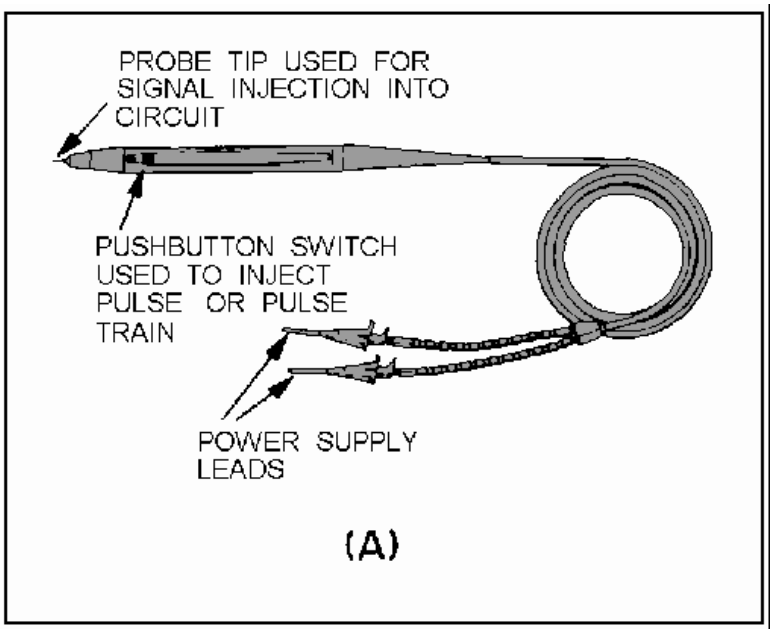

Figure 2-27A.—Logic pulser.

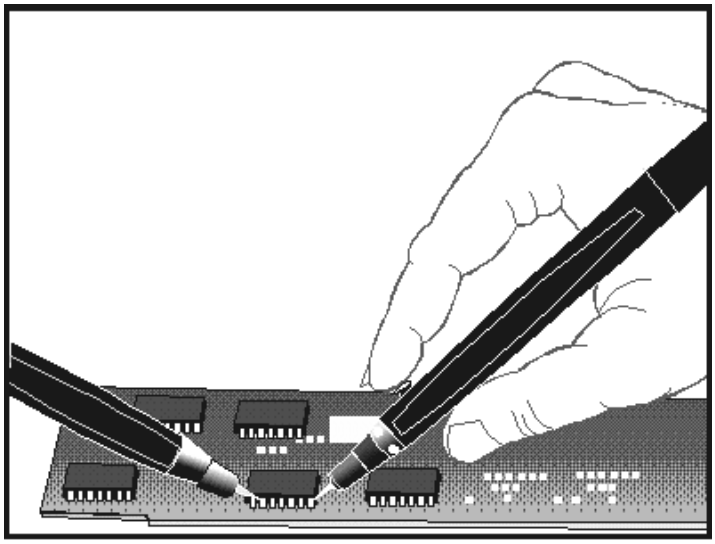

Figure 2-27B.—Logic pulser.

LOGIC ANALYZER

A relatively new device on the test equipment scene is the logic analyzer. A logic analyzer provides various functions that can assist you in maintenance, testing, and troubleshooting of equipment using digital circuitry. From your standpoint, they are extremely useful in performing timing analysis. Most logic analyzers have crt displays that can monitor up to 32 timing signals at the same time. A large percentage of today's digital equipment is designed with the logic analyzer in mind and have built-in status or bus lines for your convenience in monitoring multiple signals at the same time. When monitoring a bus line, you can readily determine, through visual displays, such things as the presence of master clock signals or sequential timing events.

BATTERY MEASUREMENTS

As a technician, you are primarily concerned with the *uses* of batteries; however, checking or testing of storage and dry cell batteries is an important part of your maintenance program. Proper preventive maintenance of batteries can significantly extend the useful life of a battery.

STORAGE BATTERIES

When you check a lead-acid type of storage battery for its condition of charge or discharge, you take a specific gravity reading of the electrolyte by using a hydrometer. A specific gravity reading between 1.275 and 1.300 indicates a full-charge condition and assures you that the battery is in good condition. A hydrometer reading of approximately 1.175 indicates a normal discharge condition, and a reading of approximately 1.250 indicates that the battery is half-discharged. Since the acids used in various batteries do not always have the same specific gravity and since electrode composition may differ, the hydrometer reading you obtain at the charged and discharged conditions will vary with the type of electrolyte and battery composition. A general rule for you to follow is not to discharge a battery more than 100 points (.100 specific gravity) before recharging.

Although readings of specific gravity are a reliable measure of the condition of a storage battery, cells that indicate normal may prove useless under load. This is usually caused by a high internal resistance. A load-voltage check of the cells with the use of a cell tester indicates the actual voltage

charge held by each battery cell. Cell voltages should not differ by more than 0.15 volt for 6-volt or 12-volt batteries.

Use extreme caution whenever testing or working around lead-acid storage batteries. OPNAVINST 5100.23B emphatically states that you must wear eye protection devices at all times and that emergency eyewash facilities must be immediately adjacent to, or within 10 feet of, any eye-hazard area. Smoking and spark-producing tools or devices are also prohibited in enclosed spaces that contain lead-acid storage batteries. When charging, these batteries produce sufficient quantities of hydrogen to produce large explosions. **Lead-acid storage batteries should only be charged in well-ventilated spaces.**

Q-24. Emergency eyewash facilities must be located within what minimum number of feet of an eye-hazard area?

DRY BATTERIES

You must periodically check dry cell batteries that are used for test instruments and portable or field equipments for loss of power. For actual voltages of dry batteries, you should measure with a battery tester for a minimum acceptable voltage before installation. The TS-183/U series of battery testers incorporate a multiple-range voltmeter, battery-loading resistors, multiplier resistors, and a jack-switching arrangement that connects the load resistors across the voltmeter for a total of 32 different voltmeter-load resistor combinations. This type of tester permits you to complete a rapid and accurate measurement of battery potentials under load conditions, ranging in voltages from 1.5 to 180 volts. A data chart supplied with the battery tester provides information regarding the jack to be used and minimum acceptable voltages of various batteries used in Navy equipments.

Q-25. What is the advantage of using a battery test set versus a voltmeter to test batteries?

Table 2-2 shows general standards of tolerance for dry batteries. Whenever practical, dry cell batteries that are not in use should be stored in a refrigerated area to extend their shelf life.

Table 2-2.—Typical voltage Tolerances for Dry Cell Batteries

RATED VOLTAGE	MAX. VOLTAGE TOLERANCE
1 to 2	0.1
3 to 10	0.3
11 to 15	0.5
16 to 25	1.0
26 to 50	2.0
50 to 70	3.0
70 to 99	5.0

CARBON-ZINC AND ALKALINE BATTERIES

Carbon-zinc and alkaline cells are used primarily in portable test equipment, vom's, flashlights, some portable radios, and beacon equipment. The carbon-zinc cell provides 1.5 volts and holds its charge for approximately 1 year in normal service. The alkaline cell provides 1.2 volts and has about twice the stored energy of the carbon-zinc cell of the same size. It also has a longer life at a higher discharge rate than the carbon-zinc cell. You should discard both types of batteries at the first indication of weakness.

MERCURY CELLS

The storage life of a mercury cell varies but is generally classified as *long*. The working life of the cell is extremely long relative to other types of batteries; and it maintains its full rated voltage (1.34 volts) until just before it is ready to expire, at which point its voltage will drop off sharply. Recharging of mercury cells is possible, but is not recommended because the recharging cycle can vary from one cell to another; and, after being recharged, their operating lifetime is uncertain.

NICKEL-CADMIUM BATTERIES (NICAD)

Nickel-cadmium batteries have very high efficiency. They can be recharged hundreds of times; given the proper conditions, they may even be recharged thousands of times. They can be stored for a number of years with no significant loss of performance. After just a few charge and discharge cycles, NICAD cells can be recharged to the point that they are just as good as new batteries. Since they are sealed, they are maintenance free and can be installed in any position. There are two types of nickel-cadmium batteries — vented and nonvented. This description deals with the nonvented exclusively because a vented NICAD would have extremely limited application in a shipboard environment.

The voltage at the terminals of a NICAD will normally be between 1.25 and 1.30 volts in an open-circuit condition. This value will vary, of course, depending on the state of charge. If the charge has dropped to a low of 1.1 volts, the NICAD should be regarded as being completely discharged and should not be permitted to be discharged further. The majority of small NICADs are rated in milliampere hours; the large ones are rated in ampere hours. The small NICAD is the one the technician will almost always be concerned with.

Q-26. At what voltage is a NICAD battery considered to be fully discharged?

As a general rule, if the charging current is held to 10% of the milliampere-hour rating for the NICAD and the time of charge is held at 150% of the time required to establish its full milliampere-hour rating, you will encounter no difficulty in maintaining NICADs at their maximum charge. For example, you should charge a battery rated at 300 milliampere hours for 15 hours at 30 milliamperes. You can leave the battery on extended charge for years, provided the charge rate is lowered to less than 10% of the NICAD's milliampere rating.

You should never place a NICAD in your pocket, because metal objects (such as keys) can short the cell and cause extreme heat. Never dispose of a NICAD by fire, because it can explode. Never solder a connection directly to the cell, because the heat of an iron can damage it. Never overcharge a NICAD cell, because an accumulation of gases within its case can destroy it.

NICADs are also subject to a phenomenon commonly referred to as cell *memory*. If a NICAD is consistently discharged to a minor extent (for example, 30 minutes per day) and then recharged after each use, the useful capacity of the cell will eventually be reduced to that level. To keep this from happening, you should fully discharge (1.1 volts) NICADs on a regular basis. In fact, some maintenance requirement cards and calibration laboratory procedures require this periodic full discharge of equipment containing NICADs.

RF ATTENUATORS AND RESISTIVE LOAD TESTS

All rf attenuators, decade or step attenuators, decade resistors, and 50/75-ohm loads are clearly marked to show their attenuation factor or resistance. In the case of precision rf attenuators, they are usually marked to show their useful frequency ranges. They are all basically resistive devices and are

designed for a multitude of applications. None of these devices are user-repairable; however, you should be aware of the different methods of determining whether or not they are functioning properly.

FIXED RF ATTENUATORS

Fixed rf attenuators (shown in fig. 2-28), such as the ones commonly found in power-measuring sets, are designed to provide a fixed-signal attenuation over a specific frequency range. Frequency ranges can be in excess of 30 gigahertz, and attenuation factors are typically in 1-, 3-, 6-, and 10-dB steps. Fixed attenuators can be connected in series to provide you with the desired attenuation. Most fixed rf attenuators are designed to handle only small amounts of rf power and are extremely susceptible to damage because of overloading. To test a fixed rf attenuator, you can either substitute it with a known good attenuator or perform basic measurements on the attenuator itself. With the rf substitution method, you connect an rf signal generator to a power meter and establish a suitable reference point on the meter by adjusting the power output of the signal generator. Once you establish the reference point, insert the rf attenuator between the signal generator and the power meter. You then determine the attenuation by noting the difference between the power meter reading and the initial reference point.

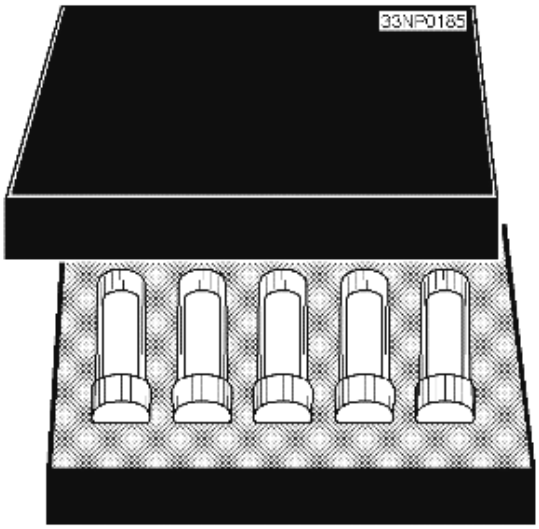

Figure 2-28.—Fixed attenuator set.

Q-27. What is the most common method of testing a fixed rf attenuator?

DECADE RESISTORS

Decade resistors (also referred to as decade boxes) typically are precision devices. Depending on the make and model of the decade resistor, it may be capable of providing you with a selection of resistors ranging in value from a small fraction of an ohm to hundreds of megohms. Decade resistors are commonly used in calibration laboratories and in engineering design applications. Like the fixed rf attenuator, most decade resistors are capable of handling only small amounts of current. They are very limited in respect to frequency capabilities and are commonly used in dc-circuit applications. You may encounter specific equipment that requires the use of a decade resistor in performing your maintenance tests or alignments. To test a decade resistor, you can connect a standard multimeter or digital multimeter directly across its resistance terminals and read its resistance on the meter. This test will only indicate gross errors in the decade resistor such as an open or a badly damaged resistor. If you are performing a precision measurement or an alignment using a decade resistor and have any doubt as to its accuracy, you should submit it to your servicing calibration laboratory. Figure 2-29 shows a typical decade resistor.

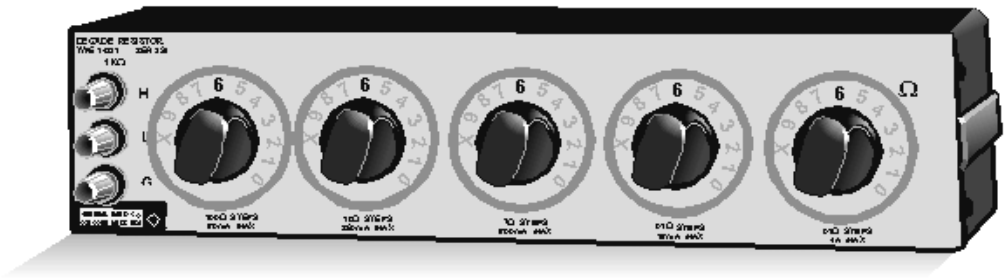

Figure 2-29.—Decade resistor.

DECADE (STEP) ATTENUATORS

Decade attenuators (also referred to as step attenuators) are common devices that may be designed as either a stand-alone piece of test equipment or as an integral part of an operational piece of electronic equipment. As the name implies, they are used to attenuate rf signals in incremental steps. Like the fixed rf attenuator, you can easily test them by using the rf substitution method, as previously described. Views A and B of figure 2-30 show two types of decade attenuators.

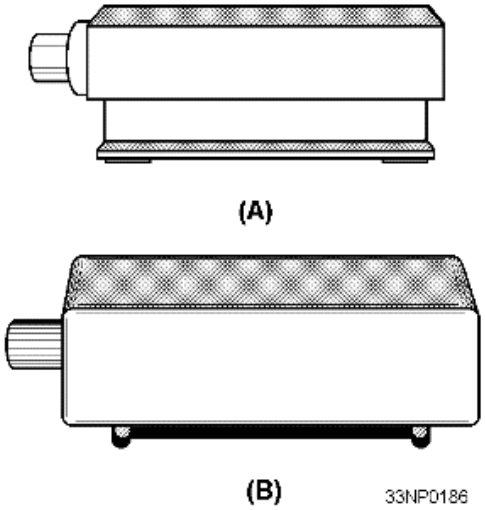

Figure 2-30.—Step attenuators.

50/75-OHM TERMINATIONS

Terminations of 50 and 75 ohms are designed as either feedthrough, impedance-matching devices, or as rf loading devices. They are precision resistors sealed in small plastic or metal enclosures and are designed to be mounted on various rf connectors. In the case of feedthrough terminations, they are designed with rf connectors at both ends, which allows the rf signal to pass through them. They are impedance-matching devices designed primarily to reduce the voltage standing-wave ratio (vswr) that is produced when two pieces of equipment with dissimilar impedances are connected together.

You can test a feedthrough termination by measuring the resistance between the center conductor and the shield of either rf connector with an ohmmeter. As mentioned above, some terminations are manufactured as loading devices that are designed to shunt an rf signal to ground. A perfectly matched termination can be compared to a transmitting antenna in that it absorbs all of the rf signal with only a

small amount of power being reflected back to the transmitting device. When using a termination as a load, you should ensure that its wattage rating exceeds the power output of the equipment to which it is connected. You can also measure this type of termination by using a standard ohmmeter to read the resistance between the center conductor and the shield of the rf connector.

Q-28. What is the most common method of testing resistive terminations?

FIBER-OPTIC TESTING

Fiber optics are a relatively new type of transmission media. Figure 2-31 depicts a typical fiber-optic cable design. The core of the fiber-optic cable is the optical transmission path, which carries data from the optical transmitter to the optical receiver. The core is usually made of plastic, glass, or plastic-clad silica (PCS). Glass-core fibers are usually smaller in diameter than plastic or PCS cores. The major disadvantages of glass cores are that they have high attenuation (25 dB/km), require precision tools and connectors, and are extremely susceptible to mechanical damage. Plastic cores are typically more rugged than other types of cores, but their attenuation is high (35 dB/km). PCS cores are fairly rugged and have a relatively low attenuation (10 dB/km). A fiber-optic cable may consist of one fiber, multiples of single-optical fibers, or bundles of optical fibers. Fiber-optic cables are well suited for the transmission of high-speed data over relatively short distances. They are virtually immune to crosstalk or interference through inductance. (Interference is a characteristic of metallic cables.)

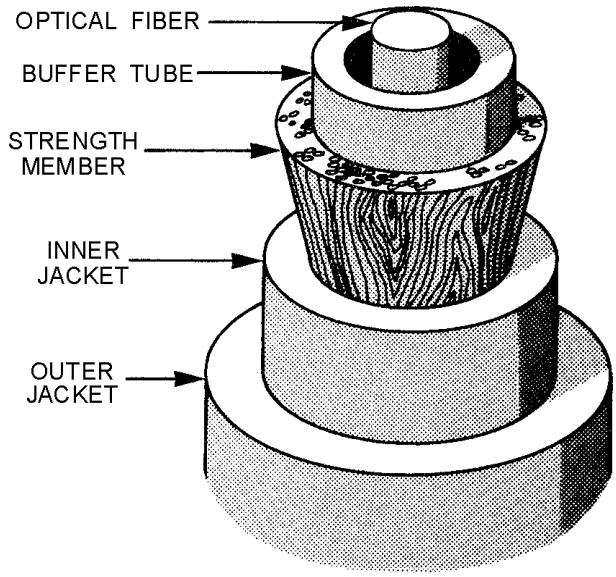

Figure 2-31.—Typical fiber-optic cable.

Testing techniques and the principles of measurement for fiber-optic and conventional cable are similar. For example, if both ends of the cable are exposed and can be used for testing, relatively unsophisticated equipment can be used to measure cable parameters, such as continuity and attenuation. This includes equipment such as optical multimeters and optical power meters (OPM). If only one cable end is available, then more sophisticated equipment such as an optical time-domain reflectometer (OTDR), is used. The following section lists and defines some common optical test equipment.

Q-29. What is the main disadvantage of using fiber-optic cables?

OPTICAL TIME-DOMAIN REFLECTOMETER (OTDR)

The portable optical time-domain reflectometer (OTDR) is used to check loss at each splice, at each connector, and of the entire system. Loss measurements are figured by using the same methods you would use for wire loss measurements. The OTDR injects a short, intense laser pulse into the fiber and monitors reflections caused by breaks, inclusions, microcracks, and discontinuities. Discontinuities appear as a spike on the OTDR display. The loss at the discontinuity point is directly related to the distance between the major pulse triggered by the laser and the spike. The manufacturer's manual provides you with conversion factors to figure actual losses and locations of the discontinuities.

OSCILLOSCOPE

An oscilloscope is used with an OTDR to provide visual evidence of fiber faults, connector and splice locations, and attenuation locations.

OPTICAL MULTIMETER

The optical multimeter measures light sources and light in cable and at the detector, fiber cable transmission loss, and connector splice loss. For cable transmission measurements, transmission through a short length of cable is compared with transmission through a known longer length.

OPTICAL OHMMETER

The optical ohmmeter measures the input versus the output of light in an optical fiber. It displays attenuation losses based on a comparison of known and unknown cable signals. It can be used in manufacturing, connecting, and installing cable. It is as simple to use as a digital voltmeter.

OPTICAL POWER METER

The optical power meter measures current by converting light power from plug-in units, such as light emitting diodes, into electrical current. In some models, the readout is in power units, watts. In other models, the readout is in absolute power levels and attenuation. Some units operate with a variety of power sensors for conventional coaxial and waveguide systems and fiber-optic systems.

RADIOMETER/PHOTOMETER

The radiometer/photometer measures light power in watts from dc to unlimited ac response. It uses plug-in sensor heads and, for low-light displays, it uses spectrometers and fiber-optic measurements.

AUTOMATIC TEST EQUIPMENT

Automatic Test Equipment (ATE) is test equipment designed to evaluate the operational performance of a piece of equipment or printed circuit board (pcb). ATE assists you in troubleshooting a fault to the defective component. Basically, ATEs are state-of-the-art, computer devices in which software programs are specifically tailored to meet the requirements of the device being tested.

The AN/USM-465 Portable Service Processor (psp), shown in figure 2-32, is the Navy's standard ATE for testing digital pcb's.

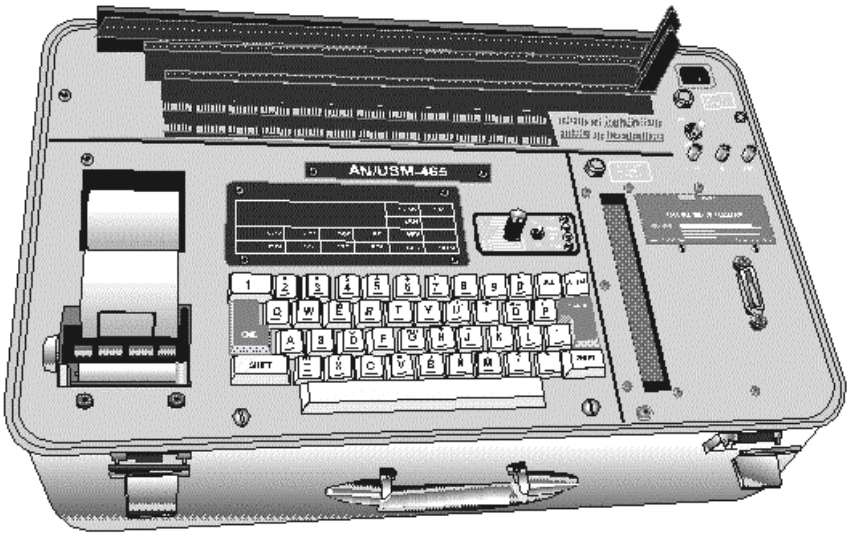

Figure 2-32.—AN/USM-465 Portable Service Processor.

The AN/USM-465 is part of the Support and Test Equipment Engineering Program (STEEP). It provides on-site screen testing and fault isolation of digital pcb's and modules. The psp is presently available on most ships and shore intermediate maintenance activities (SIMA) with Mini/Micro maintenance stations (2M). Psp's come with maintenance-assist modules (spare parts kit) and diagnostic kits.

The psp is easy to use. You have a choice of three pcb connectors (located on the top panel of the test set) into which you insert the pcb being tested. The software program, which is provided on magnetic tape cartridges, is then loaded into the test set. The test set automatically tests the pcb by applying input signals to the appropriate pins while monitoring the output signal for a correct indication. An LED display will give you a pass or fail indication. If a pcb fails the operational test, the psp tells you (via LED display) what troubleshooting steps must be taken. The psp uses a *guided probe* fault isolation technique that tells you what test points to check on the faulty pcb. The software program guides you from the faulty output backwards toward the input until the fault is located. The probe is a standard 10 megohm, 10 to 1 oscilloscope probe. The guided probe circuitry and software is also unique because it is capable of locating faults within feedback loops and can sense when you have placed the probe at an incorrect test point.

An interesting advantage is that if the psp itself fails, the faulty board inside the psp can be identified by the test set's own capability. After you replace the faulty pcb with a good one from the spare parts kit, you can use the psp to identify the faulty component on its own pcb.

HUNTRON TRACKER 2000

The Huntron Tracker 2000, shown in figure 2-33, is a versatile troubleshooting tool used to statically test resistors, capacitors, inductors, diodes, transistors, multiple-component circuits, and integrated circuits. Its built-in features eliminate the use of multiple pieces of test equipment. These features and its lightweight portability make the 2000 a widely used tool for troubleshooting.

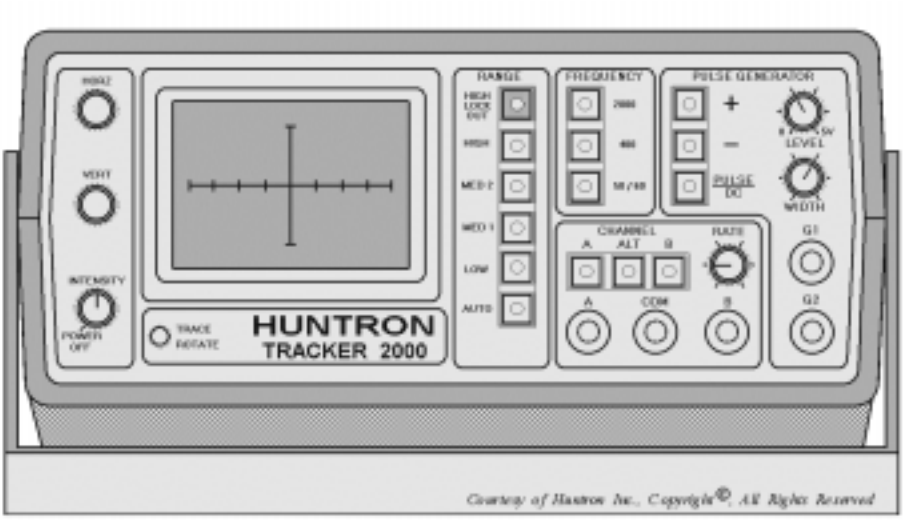

Figure 2-33.—Huntron Tracker 2000.

We recommend you review setup and operating procedures discussed in NEETS Module 16, *Introduction to Test Equipment*, NAVEDTRA B72-16-00-95, before continuing with this chapter. Since the 2000 was covered in depth in module 16, we will cover only the most common troubleshooting procedures and provide a few troubleshooting tips.

Q-30. What two features make the Huntron Tracker 2000 a widely used troubleshooting tool?

The Huntron Tracker 2000 has the following features:

- Multiple-test signal frequencies (2000 Hz, 400 Hz, and 50/60 Hz).
- Four impedance ranges (low, medium 1, medium 2, high).
- Automatic range scanning.
- Range control: High Lockout.
- Rate-of-channel alteration and/or range scanning is/are adjustable.
- Dual-polarity pulse generator for dynamic testing of three terminal devices.
- LED indicators for all functions.
- Dual-channel capability for easy comparison.
- Large CRT display with easy-to-operate controls.

CAUTION

The device to be tested must have all power turned off, and have all high voltage capacitors discharged before connecting the Tracker 2000 to the device.

Testing Components by Comparison

Testing components by comparison is the most preferred method for troubleshooting. The ALT (alternate) mode setup is the most commonly used mode for this method. This mode allows the technician to compare a known good component to a suspect component. This is accomplished by connecting channel A to a known good device, channel B to the device under test, and a common test lead to COM as illustrated in figure 2-34. Select the ALT button, and the 2000 will alternately display the signature of the known good device and the device under test. By examining the signature differences, you can detect a defective component. Figure 2-35 is a typical example of the CRT display on the 2000 while testing the base to emitter on a good transistor. Figure 2-36 illustrates a defective transistor under the same test setup. Note that in the low range, the transistor appears to be good. Sometimes component defects are more obvious in one range than another, so is a suspect device appears normal for one range, try the other ranges.

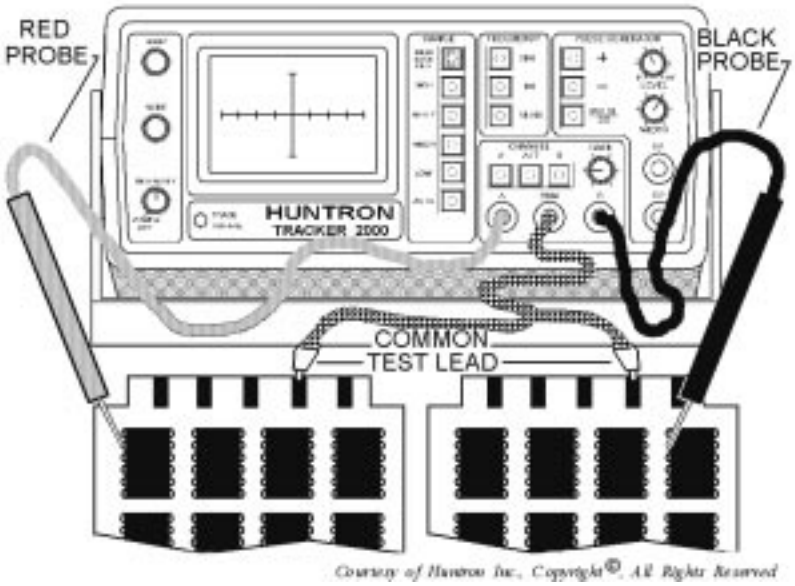

Figure 2-34.—Alternate mode setup.

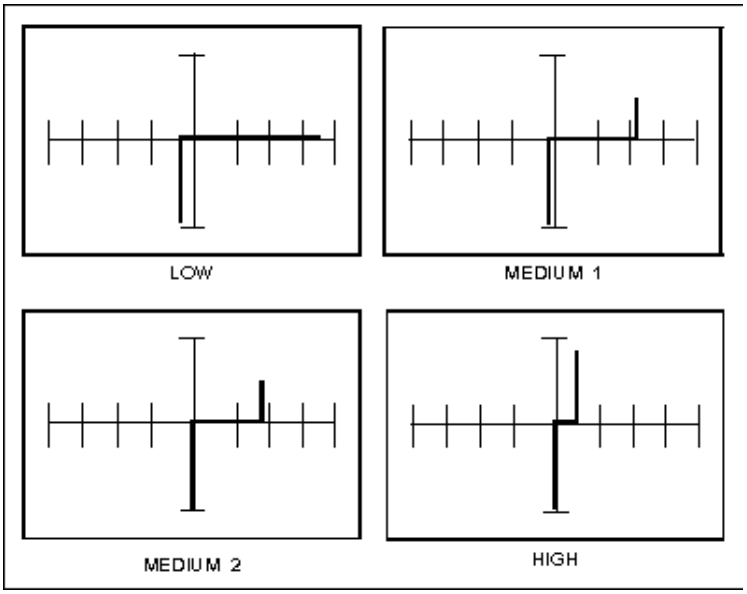

Figure 2-35.—Signatures between base-emitter of a good transistor.

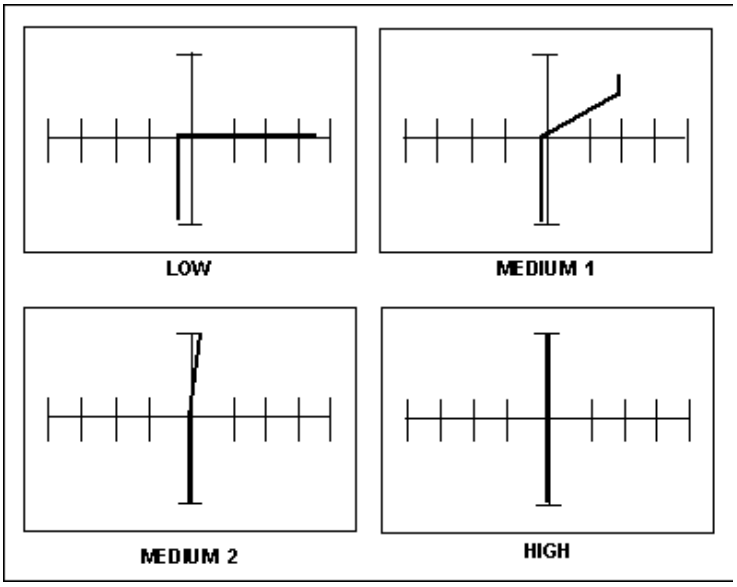

Figure 2-36.—Signatures between base-emitter of a defective transistor.

Q-31. What is the most preferred method of troubleshooting?

Q-32. Why is it recommended to use more than one range while troubleshooting a device?

Troubleshooting Tips

When you are testing individual components in a circuit, a parallel resistor or diode of similar value may cause a defective component to appear good. Therefore, you should, in most cases, electrically isolate the suspected component from the circuit while testing individual components. The best way to do this is to desolder all but one lead on the suspected component.

Q-33. When you are testing individual components in a circuit, what may cause a defective component to appear good?

You should be aware that devices made by different manufacturers may appear to have slightly different signatures. This is normal, especially with digital integrated circuits, and does not necessarily indicate a failed device. When this occurs, the best way to verify this is to compare the outputs of the device under test with the equipment specifications to ensure the signals are adequate for proper equipment operation.

SUMMARY

The information that follows summarizes the important points of this chapter.

ELECTRON TUBES are usually tested for **SHORTS, TRANSCONDUCTANCE**, and the presence of GAS. Several different types of tubes (i.e., twt's, magnetrons, and klystrons) are normally tested in-circuit.

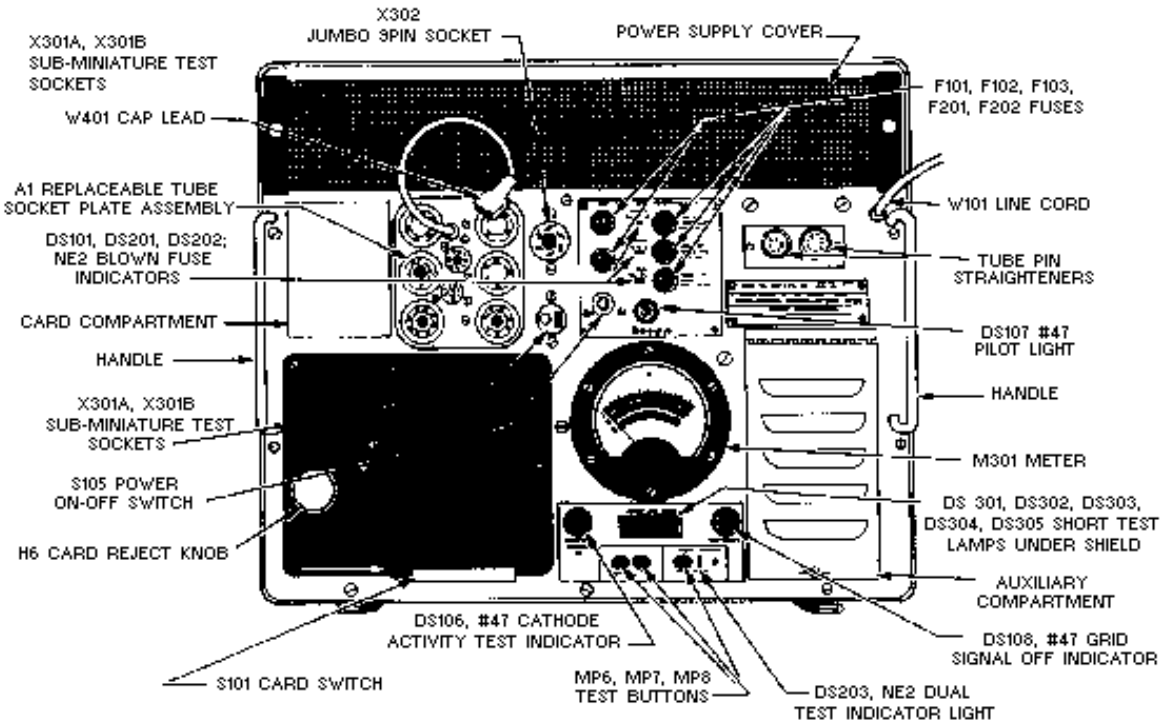

Most **TRANSISTORS** can be tested by measuring the forward-to-back resistance of their junctions using a standard ohmmeter. The resistance scale of the ohmmeter must be carefully selected to ensure that the current rating of the transistor is not exceeded.

ESD-SENSITIVE DEVICES are components that require special handling. Some of the more sensitive devices can be damaged by static charges as small as 35 volts.

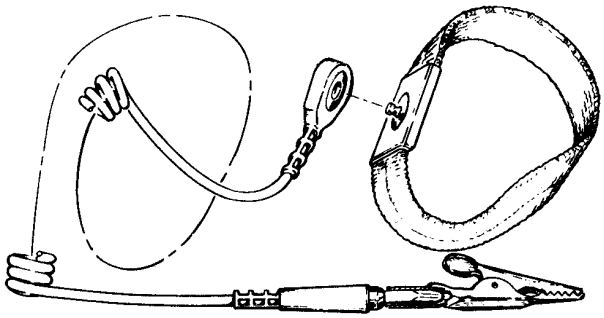

Most **DIODES** and **MOSFETs** can be tested by measuring the forward-to-back resistance of their junctions using a standard ohmmeter. MOSFETS, however, are classed as ESD-sensitive devices; and care should be exercised when handling or testing them.

INTEGRATED CIRCUITS (ICs) have revolutionized the electronics industry. They are rugged, compact, and inexpensive. There is a wide assortment of equipment on the market designed for testing ICs.

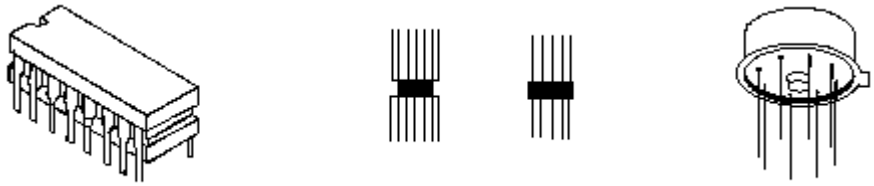

BATTERIES are common to a large number of both electronic test equipment and operational equipment. You should be familiar with the different types of batteries, their test requirements, and the safety precautions to be followed.

RF ATTENUATORS and **RESISTIVE LOADS** are common devices that are widely used for attenuating rf signals and impedance matching. Resistive loads can be tested with a standard ohmmeter, and rf attenuators are normally tested through the rf substitution method.

FIBER-OPTIC CABLES are used primarily for the transmission of high-speed data over short distances. Their construction and theory of operation require that they be tested with a light source, usually a laser beam. There is a wide assortment of test equipment designed specifically for testing fiber-optic cables.

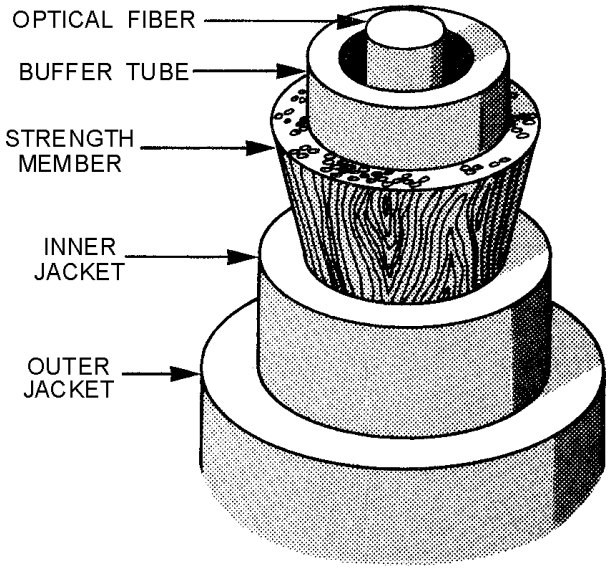

AUTOMATIC TEST EQUIPMENT (ATE) is test equipment designed to evaluate the operational performance of a piece of equipment or printed circuit board (pcb).

The **HUNTRON TRACKER 2000** is a versatile troubleshooting tool commonly used for statically testing resistors, capacitors, inductors, diodes, transistors, multiple-component circuits, and integrated circuits.

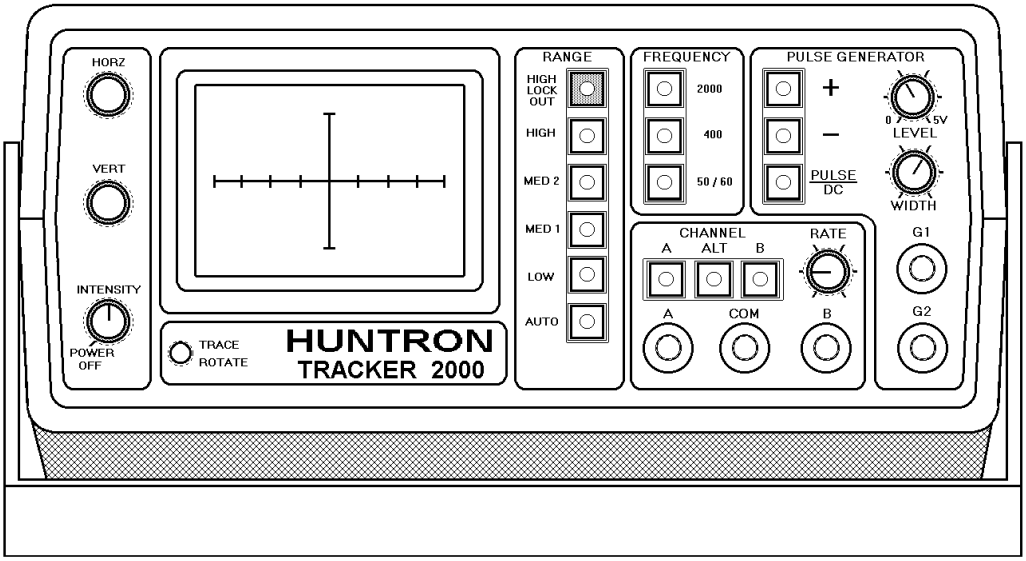

REFERENCES

EIMB, *Test Methods and Practices*, NAVSEA 0967-LP-000-0130, Naval Sea Systems Command, Washington, D.C., 1980.

Fiber Optic Communication Cables and Connectors, (Navy) EE169-CA-GYD-010/E110 TSER E & I, (Published under the authority of the Secretaries of the Air Force, Army, and Navy), 1983.

Fire Control Technician G 3 & 2, NAVEDTRA 10207-B, Naval Education and Training Professional Development and Technology Center, Pensacola, Fla., 1981.

Huntron Tracker 2000 Operation and Maintenance Manual, P/N 21-1052, Huntron Instruments, Inc., 15720 Mill Creek Blvd., Mill Creek, WA 98012.

Introduction to Microelectronics, NAVEDTRA 172-14-00-84, Naval Education and Training Professional Development and Technology Center, Pensacola, Fla., 1984.

Logic Clip 548A, NAVAIR 16-45-3102, Naval Air Systems Command, Washington, D.C., 1979.

Logic Comparator 10529A, NAVAIR 16-45-3100, Naval Air Systems Command, Washington, D.C., 1979.

Logic Probe 545A, NAVAIR 16-45-3105, Naval Air Systems Command, Washington, D.C., 1979.

Logic Pulser 546A, NAVAIR 16-45-3104, Naval Air Systems Command, Washington, D.C., 1979.

ANSWERS TO QUESTIONS Q1. THROUGH Q33.

A-1. Lack of adequate storage space.

A-2. Open filaments.

A-3. Testing the tube in its circuit.

A-4. In their circuit.

A-5. Restore it to serviceable condition by operating it temporarily at reduced beam voltage.

A-6. Correct gain figure.

A-7. Rugged design.

A-8. Sensitive to heat and minor overloads.

A-9. Any range setting that produces a current flow through the transistor that exceeds 1 milliamp (usually R x 1 range).

A-10. 3,500 to 4,000 volts.

A-11. 35 volts.

A-12. For your own safety.

A-13. Voltages and resistances.

A-14. Greater than 10 to 1.

A-15. Gate and anode.

A-16. Current is allowed to flow in either direction.

A-17. Solder suckers create an electrostatic charge capable of damaging a MOSFET.

A-18. Low power consumption, compact size, and lower cost.

A-19. ICs cannot be repaired. All you need to test is output versus input.

A-20. A "1" or "0."

A-21. A "1" state.

A-22. A difference in logic states between the reference IC and the IC under test.

A-23. They provide you with a visual indication of the logic state at any point you choose in the circuit.

A-24. 10 feet.

A-25. A battery test set will test batteries under load conditions.

A-26. At 1.1 volts.

A-27. *Rf substitution method.*

A-28. *Reading their resistances with a standard ohmmeter.*

A-29. *High attenuation.*

A-30. *It eliminates the need for multiple pieces of test equipment and it is lightweight and portable.*

A-31. *Testing components by comparison.*

A-32. *Some defective devices may appear to be good in certain ranges.*

A-33. *A parallel resistor or diode of similar value.*

CHAPTER 3

QUANTITATIVE MEASUREMENTS

LEARNING OBJECTIVES

Upon completion of this chapter, you will be able to do the following:

1. Explain the purposes and benefits of performing quantitative measurements.
2. Identify the various methods of performing impedance measurements.
3. Identify the various methods of performing power measurements.
4. Identify the various methods of performing frequency measurements.

INTRODUCTION TO QUANTITATIVE MEASUREMENTS

You have already studied the basics of performing electronics measurements and how to determine if a component is or is not functioning properly. This chapter will cover techniques used in measurements of specific impedance, frequency, and power. These measurements are extremely important to you in evaluating the performance of a piece of electronic equipment.

IMPEDANCE MEASUREMENTS

Impedance measurements are often used during routine test procedures. Impedance-measuring equipment, such as impedance bridges, are mainly used in determining the capacitance and inductance of component parts. However, the values of combined circuit constants also may be obtained and used in direct calculations of impedance. An impedance measurement effectively totals the inductive and capacitive reactance together with the resistance in a circuit. In addition, impedance measurements are useful in testing and analyzing antenna and transmission line performance and for determining the figure of merit (Q) of electrical parts and resonant circuits.

Q meters are impedance-measuring instruments that determine the ratio of reactance to resistance of capacitors or inductors and resistors. Details of Q meters and impedance bridges as well as a number of other methods of measuring circuit impedance are described in the following paragraphs. Also discussed are methods of measuring the impedance of antennas and transmission lines.

BRIDGE METHODS

Bridges are among the most accurate types of measuring devices used in the measurement of impedance. In addition, bridges are also used to measure dc resistance, capacitance, and inductance. Certain types of bridges are more suitable for measuring a specific characteristic, such as capacitance or inductance. Basic schematics for the various bridge circuits are shown in figure 3-1. The bridge circuits shown are similar in that they usually contain two branches in the measuring circuit, two branches in the comparing circuit, a detector circuit, and a power circuit, as shown in figure 3-2. The bridge shown in figure 3-2 is actually the dc Wheatstone bridge; however, the general principles of circuit operation for ac remain the same.

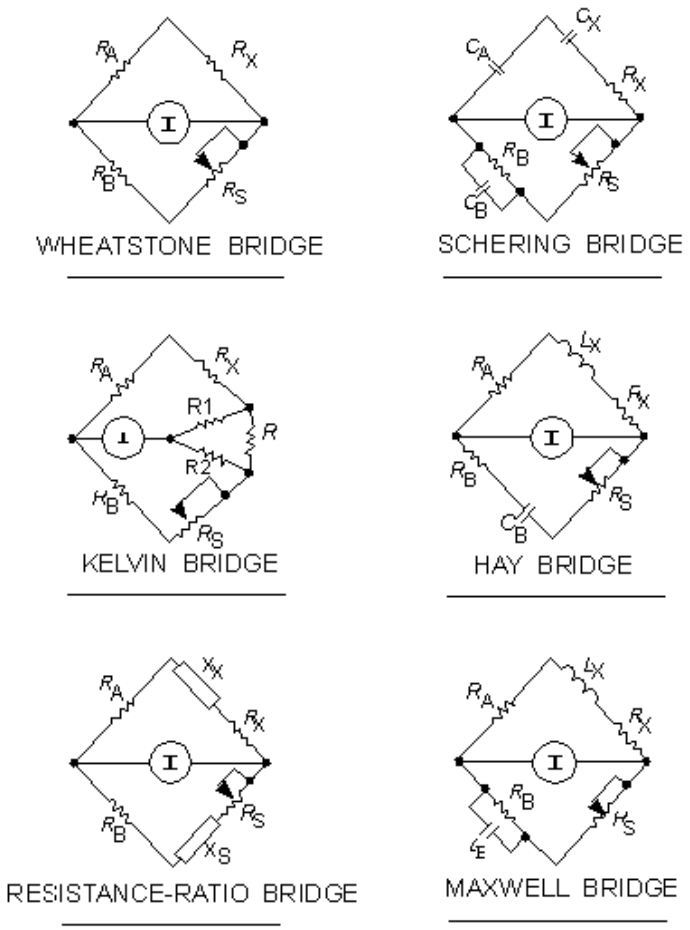

Figure 3-1.—Basic bridge circuits.

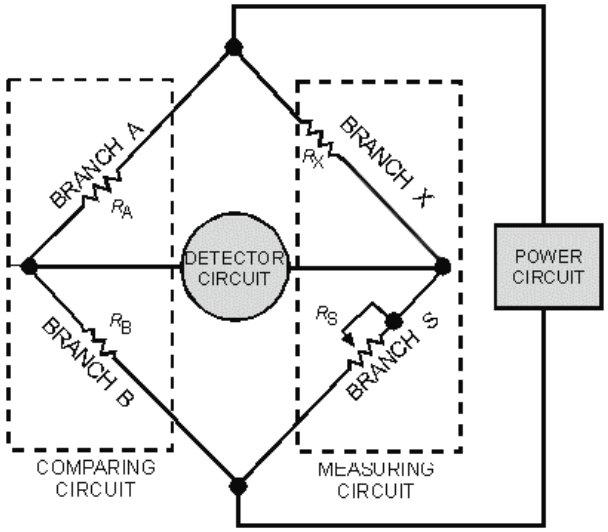

Figure 3-2.—Typical bridge circuit configuration.

The comparing circuit contains branches A and B and has provisions for changing the ratios of the branches with respect to each other, which enables various measuring ranges to be obtained. Comparison of figures 3-1 and 3-2 shows that either or both branches of the comparing circuit do not necessarily contain resistors alone. Branch B of the Hay bridge, containing C_B and R_B in series connection, provides a striking contrast with the parallel connection of C_B and R_B of the Maxwell bridge.

The measuring circuit in figure 3-2 also contains two branches. The resistance, capacitance, or inductance to be measured is connected to branch X of the bridge-measuring circuit. The subscript X is also used in figure 3-1 to designate the circuit parameters involved in computing the values of various electronic parts. Branch S contains the variable control used to bring the bridge into a balanced condition. A potentiometer is used for this purpose in most bridge equipment, because it offers a wide range of smoothly variable current changes within the measuring circuit.

The third arm of the bridge is the detector circuit. The detector circuit may use a galvanometer for sensitive measurements that require high accuracy. In the case of bridges using ac as the power source, the galvanometer must be adapted for use in an ac circuit. In many practical bridge circuits using ac to operate the bridge, an electron-ray indicating tube is used to indicate the balanced condition by opening and closing the shadow area of the tube. Headsets are also used for audible balance detection, but this method reduces the accuracy obtainable with the bridge.

Switches are used in bridge circuits to control the application of operating power to the bridge and to complete the detector circuit. Frequently, the two switching functions are combined into a single key, called a bridge key, so that the operating power is applied to the bridge prior to the detector circuit. This sequence reduces the effects of inductance and capacitance during the process of measurement.

The most unfavorable condition for making a measurement occurs when the resistance, capacitance, or inductance to be measured is completely unknown. In these cases, the galvanometer cannot be protected by setting the bridge arms for approximate balance. To reduce the possibility of damage to the galvanometer, you should use an adjustable shunt circuit across the meter terminals. As the bridge is brought closer to the balanced condition, the resistance of the shunt can be increased; when the bridge is in balance, the meter shunt can be removed to obtain maximum detector sensitivity.

Bridges designed specifically for capacitance measurements provide a dc source of potential for electrolytic capacitors. The electrolytic capacitors often require the application of dc polarizing voltages in order for them to exhibit the same capacitance values and dissipation factors that would be obtained in actual circuit operation. The dc power supply and meter circuits used for this purpose are connected so that there is no interference with the normal operation of the capacitance-measuring bridge circuit. The dissipation factor of the capacitor may be obtained while the capacitor is polarized. In figure 3-2, the signal voltage in the A and B branches of the bridge will be divided in proportion to the resistance ratios of its component members, R_A and R_B, for the range of values selected. The same signal voltage is impressed across the branches S and X of the bridge. The variable control, R_S, is rotated to change the current flowing through the S and X branches of the bridge. When the voltage drop across branch S is equal to the voltage drop across branch A, the voltage drop across branch X is equal to the voltage drop across branch B. At this time the potentials across the detector circuit are the same, resulting in no current flow through the detector circuit and an indication of zero-current flow. The bridge is balanced at these settings of its operating controls, and they cannot be placed at any other setting and still maintain this balanced condition.

The ability of the bridge circuit to detect a *balanced* condition is not impaired by the length or the leads connecting the bridge to the electronic part to be measured. However, the *accuracy* of the measurement is not always acceptable, because the connecting leads exhibit capacitive and inductive

characteristics, which must be subtracted from the total measurement. Hence, the most serious errors affecting accuracy of a measurement are because of the connecting leads.

Stray wiring capacitance and inductance, called residuals, that exist between the branches of the bridge also cause errors. The resistance-ratio bridge, for example, is redrawn in figure 3-3 to show the interfering residuals that must be eliminated or taken into consideration. Fortunately, these residuals can be reduced to negligible proportions by shielding and grounding. A method of shielding and grounding a bridge circuit to reduce the effects of interfering residuals is through the use of a Wagner ground, as shown in figure 3-4. Observe that with switch S in position Y, the balanced condition can be obtained by adjusting Z^1 and Z^2. With switch S in position X, the normal method of balancing the bridge applies. You should be able to reach a point where there is no deflection of the meter movement for either switch position (X or Y) by alternately adjusting Z^1 and Z^2 when the switch is at position Y and by adjusting R_S when the switch is at position X. Under these conditions, point 1 is at ground potential; and the residuals at points 2, 3, and 4 are effectively eliminated from the bridge. The main disadvantage of the Wagner ground is that two balances must be made for each measurement. One is to balance the bridge, and the other is to balance the Wagner ground. Both adjustments are interacting because R_A and R_B are common to both switch positions X and Y.

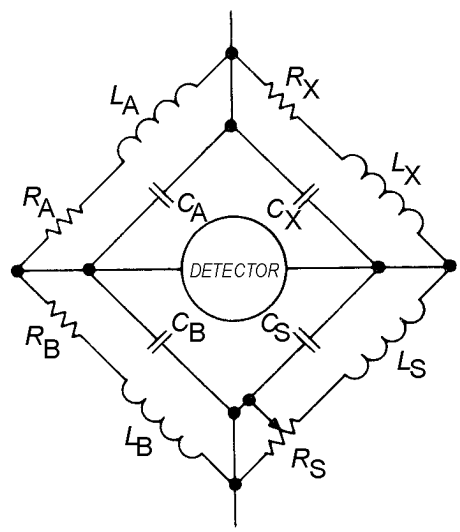

Figure 3-3.—Resistance-ratio bridge residual elements.

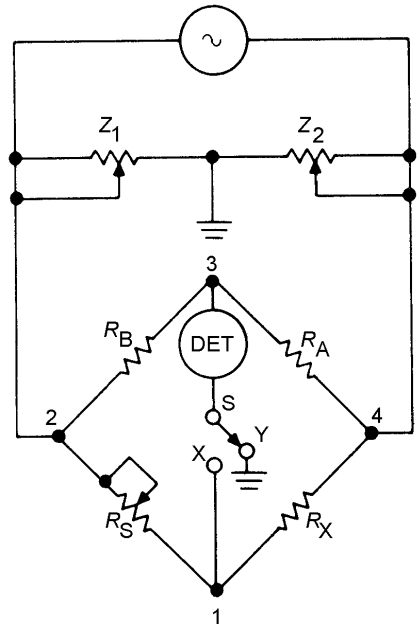

Figure 3-4.—Wagner ground.

Many bridge instruments provide terminals for external excitation potentials; however, do not use a voltage in excess of that needed to obtain reliable indicator deflection because the resistivity of electronic parts varies with heat, which is a function of the power applied.

Q-1. What conditions must be met in order to balance a bridge circuit?

Q-2. When you are measuring a component using a bridge, what is the most common cause of inaccurate measurements?

Wheatstone Bridge

The Wheatstone bridge, shown in figure 3-1, is often used to measure resistance. These instruments are usually portable because they require only a small, dc source to power the bridge, which is easily obtained from flashlight batteries. In those cases where an external supply voltage is desirable for the operation of the bridge, use the minimum voltage that will give a reliable indication by the galvanometer. Increasing the supply voltage any further results in uncompensated thermal variations and decreased bridge accuracy. If greater bridge sensitivity is needed, use a galvanometer with greater sensitivity.

A number of other considerations are involved in the choice of a galvanometer. For example, the galvanometer should not be subjected to false or erratic indications because of external magnetic fields. This requirement dictates the choice of a shielded meter mechanism. It is also desirable to use a critically dampened meter movement to ensure decisive movement of the meter pointer during conditions of bridge unbalance. Thermal agitation sometimes produces voltages that interfere with the balancing of the bridge. For this reason, the Wheatstone bridge usually includes a polarity-reversing switch in the detector circuit. When a measurement is required, note the reading for both positive and negative indications, and figure the average of both readings. With the exception of inaccuracies introduced by thermal variations (caused by excessive supply voltages), the accuracy of the Wheatstone bridge is, otherwise, independent of the value of supply voltages. The units used in calibrating the galvanometer are unimportant to the accuracy of the bridge, since a 0 indication is desired at the balanced condition.

Resistance values ranging from 1 ohm to 1 megohm can be measured with an accuracy of approximately 0.1%. However, difficulties are encountered when very high and very low resistances are measured. Resistances less than 1 ohm are difficult to measure accurately because of uncertainty arising from the contact resistance present between the resistor to be measured and the binding posts of the bridge. Measurement of resistances greater than 1 megohm becomes difficult because of two factors: (1) The ratio of standard resistances R_A and R_B involve a ratio on the order of 1,000 to 1, and (2) the voltage applied to the bridge must be substantially increased to obtain definite galvanometer action. The result is that an increase in the supply voltage increases the power dissipation (heat) of the bridge resistors. The change in resistance R_B, because of the heat, is sufficient to produce an appreciable error. A Kelvin bridge is recommended for measuring resistances lower than 1 ohm. An electronic multimeter is recommended for the indicating device in bridges used for the measurement of very high resistances.

One of the most elementary precautions concerning the use of a bridge, when measuring low resistance, is to tighten the binding posts securely so that the contact resistance between the binding posts and the resistance to be measured is minimum. Leakage paths between the resistor leads along the outside surface of the resistor body must be avoided when resistances greater than 0.1 megohm are measured. Search for defective solder joints or broken strands in stranded wire leads; these defects can cause erratic galvanometer indications. In those cases where wire leads must be used to reach from the resistance under test to the bridge terminals, measure the ohmic value of those leads prior to further measurements.

Q-3. How does the supply voltage affect the accuracy of Wheatstone bridge measurements?

Kelvin Bridge

It is often necessary to make rapid measurements of low resistances, such as samples of wire or low values of meter shunt resistors. A frequently used instrument that is capable of good precision is the Kelvin bridge, shown in figure 3-1. Note the similarity between this and the Wheatstone bridge. Two additional resistances, R1 and R2, are connected in series and shunted across resistance R, which is the circuit resistance existing between the standard and unknown resistances, R_S and R_X, respectively. In performing the adjustment for balance, you must make the ratio of R1 to R2 equal to the ratio of R_A to R_B. When this is done, the unknown resistance can be computed in the same manner as that for the Wheatstone bridge, because resistance R is effectively eliminated.

In using a Kelvin bridge, you must follow precautions similar to those given for the Wheatstone bridge. A rheostat is usually placed in series with the battery so that bridge current can be conveniently limited to the maximum current allowable. This value of current, which affects the sensitivity of the bridge, is determined by the largest amount of heat that can be sustained by the bridge resistances without causing a change in their values. All connections must be firm and electrically perfect so that contact resistances are held to a minimum. The use of point and knife-edge clamps is recommended. Commercially manufactured Kelvin bridges have accuracies of approximately 2% for resistance ranges from 0.001 ohm to 25 ohms.

Q-4. Kelvin bridges are well suited for what type of measurements?

Resistance-Ratio Bridge

The resistance-ratio bridge, shown in figure 3-1, may be used to measure capacitance, inductance, or resistance so long as the electronic part to be measured is compared with a similar standard. The measurement of the value of a capacitor must be made in terms of another capacitor of known characteristics, termed the STANDARD CAPACITOR. The same requirement is necessary for an inductance measurement. The standard of comparison is designated as X_X, and the losses of the standard are represented as R_X. If you experience difficulty in obtaining a balanced bridge condition, insert

additional resistance in series with branch S of the bridge. This adjustment becomes necessary because the *Q* of the unknown capacitor or inductor in branch X is higher than the comparable *Q* of the standard in branch S.

Schering Bridge

The Schering bridge, shown in figure 3-1, is a commonly used type of bridge for the measurement of capacitors and dielectric losses. The *Q* of a capacitor is defined as the reciprocal of the dissipation factor, which is the ratio of the capacitor's dielectric constant to its conductivity at a given frequency. Accordingly, capacitor *Q* is determined by the frequency used to conduct the measurement and the value of the capacitor, C_B, required to obtain bridge balance. The accuracy of this type of bridge is excellent, about 2% for dissipation factors ranging from 0.00002 to 0.6. Typical accuracies for capacitive reactances in the range of 100 picofarads to 1 microfarad are 0.2%.

Hay Bridge

The Hay bridge, shown in figure 3-1, is used for the measurement of inductance and the *Q* of the inductor. It is interesting to note that this type of bridge measures inductance by comparing it with a standard capacitor of known characteristics. This arrangement provides the advantage of a wide measurement range with the minimum use of electronic parts as comparison standards. A typical range of values that can be measured with the Hay bridge is from 1 microhenry to 100 henries. The accuracy of the measurements made with this bridge is about 2%. The frequency used in conducting the inductance measurement must be taken into account because of the series reactance of capacitor C_B. The loss factor of the inductor under test is balanced in terms of the *Q* of the inductor. The Hay bridge, then, is used for measurement of inductances having a *Q* greater than 10. For instance, a *Q* of 10 gives a calibration error of 1%, whereas a *Q* of 30 gives a calibration error of 0.1%.

Q-5. When you are testing an inductor with a Hay bridge, the characteristics of the inductor are compared with what type of device?

Maxwell Bridge

The Maxwell bridge, shown in figure 3-1, is used for the measurement of inductance and inductive *Q*. This bridge is similar to the Hay bridge because it also measures inductance by comparison with a standard capacitor of known characteristics. Notice, in particular, that capacitor C_B is connected in parallel with resistor R_B. In connection with this difference, the requirement of an accurately known frequency is removed. This bridge circuit is employed for measuring the inductance of inductors having large losses; i.e., low *Q*. The range of this type of instrument is much greater than that of the Hay bridge; values ranging from 1 microhenry to 1,000 henries are measurable, with an error of only 2%.

VECTOR BRIDGES

The basic bridges described up to now determined the resistive and reactive components of the unknown impedance; however, the vector bridge indicates the magnitude and phase angle. Typically, vector bridges require two null readings. Consider the basic bridge circuit of figure 3-5. The magnitude of the unknown impedance (Z_X) is determined by the voltages applied across *R* and Z_X and to the bases of emitter followers Q1 and Q2, which bias the balanced rectifiers, CR1 and CR2. Resistors *A* and *B* are equal in value. When *R* is adjusted to equal Z_X, the voltages between points 1 and 2 and between points 1 and 4 are equal in magnitude, and the vtvm will indicate 0 volts.

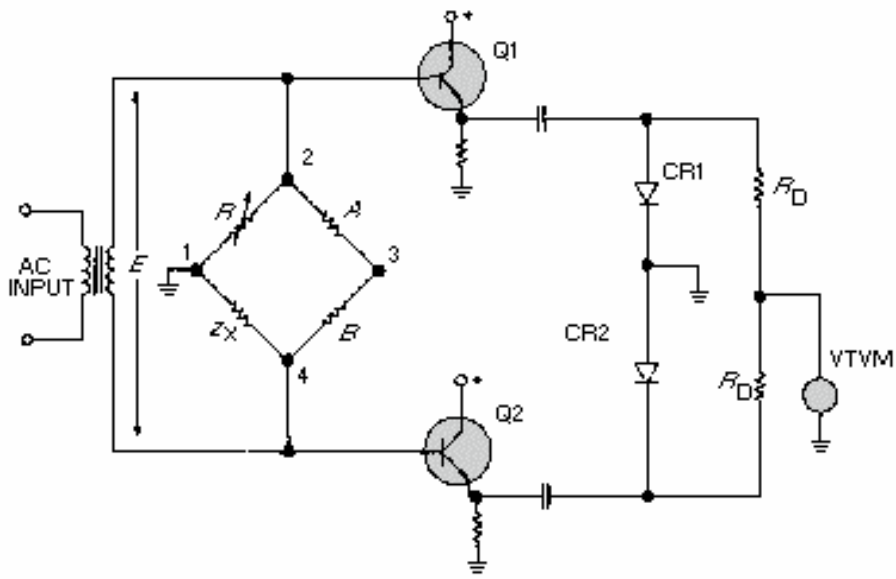

Figure 3-5.—Typical vector-bridge configuration (amplitude).

The absolute value of Z_X is determined from the dial calibration of *R*. Without altering the amplitude balance, you reconnect the external circuits as shown in figure 3-6. Note that the voltage between points 1 and 3 is being compared to the voltage between points 1 and 2. Potentiometer *R*, calibrated in degrees, is adjusted for a null indication on the vtvm; and the phase angle is read directly. If Z_X is purely resistive, the voltage between points *1* and *3* will be zero and the setting of *R* will be 0 volts. If Z_X is purely reactive (capacitive or inductive), the setting of *R* will be at maximum voltage. For phase angles between 0º and 90º, the scale of *R* may be calibrated directly in degrees. The sign of the phase angle can be determined by changing the signal frequency slightly and observing the change in impedance. The presence of harmonics in the signal input will severely hamper the measurements. If a pure frequency source is not available, suitable low-pass filters will have to be employed in the output leads from the bridge.

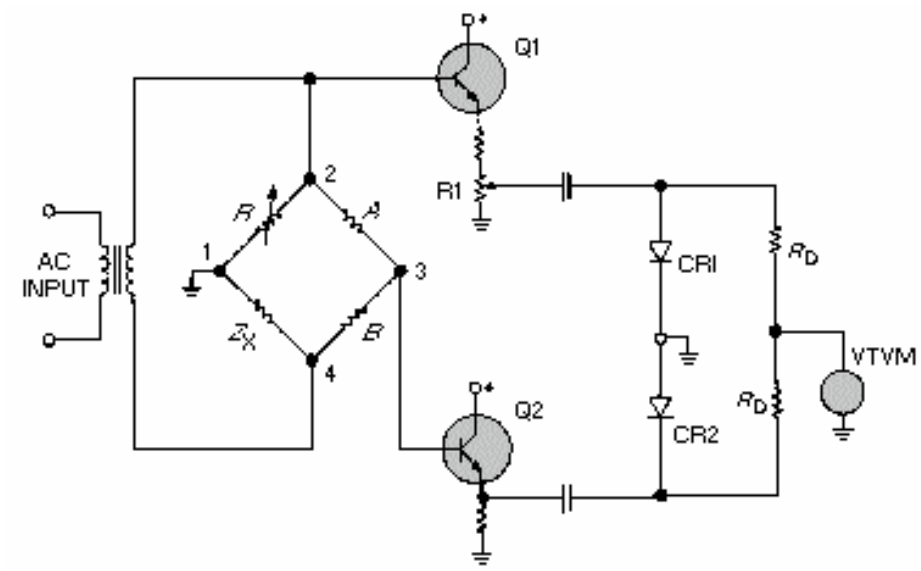

Figure 3-6.—Typical vector-bridge configuration (phase).

CONSTANT-CURRENT, IMPEDANCE-MEASURING TECHNIQUE

This technique employs an oscillator circuit and a vtvm, as shown in figure 3-7.

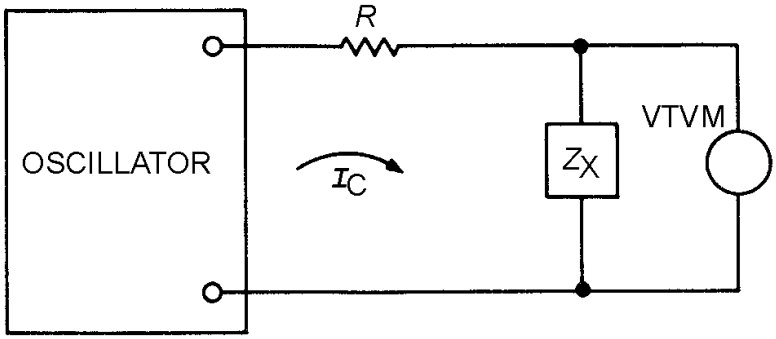

Figure 3-7.—Constant-current, impedance-measuring method.

A large value of resistance, R, is selected so that I_C is virtually independent of the range of Z_X to be measured. Thus, $I_C Z_X$ represents the value of voltage measured by the vtvm. If R is chosen so that the voltage drop across Z_X corresponds to a full-scale reading on the vtvm, a direct reading impedance meter is realized. For example, assume that the audio oscillator open-circuit voltage is 10 volts (rms) and that the full-scale reading of the vtvm is 0.05 volt. If you want to measure Z_X values ranging up to a maximum of 5,000 ohms, you should use a 1-megohm resistor for R. This will result in a full-scale, 0.05-volt deflection. An oscillator that does not produce harmonics should be used.

IMPEDANCE-ANGLE METER

Like vector bridges, impedance-angle meters determine an unknown impedance in terms of magnitude and phase angle. However, a non-bridge technique is used. The simplified circuit of a commercial instrument is shown in figure 3-8. With switches S1 and S2 at the BAL position, the variable

standard resistor, *R*, is adjusted until the balanced rectifier outputs of Q1 and Q2 are equal (indicated by a null in the deflection of the voltmeter connected between the emitters of Q3 and Q4). The dial setting of *R* gives the value of Z_X. For phase angle determination, the circuit is switched to CAL and the input voltage is adjusted for full-scale voltmeter deflection. The circuit is then switched to PHASE; thus, the paralleled outputs of Q1 and Q2 are applied to rectifier CR1 only. With S2 in the phase position, there is no input to the base of Q4. If *Z* is purely resistive, the outputs of Q1 and Q2 cancel, and the voltmeter indicates zero deflection. For a complex impedance, the base of Q3 will be unbalanced with respect to the base of Q4; and the voltmeter deflection, calibrated in degrees, determines the phase angle of the unknown impedance. Typical commercial impedance angle meters, operating at 2 MHz, are accurate to within 4% for impedances of from 10 to 500 ohms.

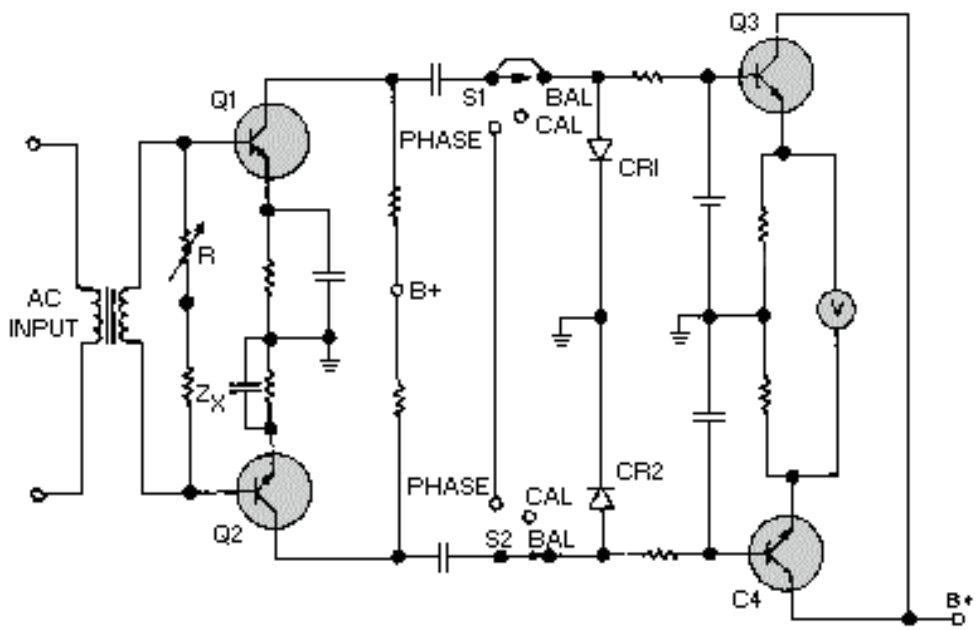

Figure 3-8.—Impedance-angle meter.

Q-6. What do impedance-angle meters and vector bridges have in common?

IMPEDANCE TESTING OF ANTENNAS AND TRANSMISSION LINES

The amount of current that flows in an antenna is one of the most important factors affecting the performance of transmitter equipment. As much of the rf energy generated as possible must be efficiently transferred to the antennas to secure the maximum radiated power from a transmitter. Also, for best reception, maximum transfer of energy from the antenna to the receiver must occur. Efficient transmission and reception conditions prevail whenever the transmitter (or receiver) is properly matched to the transmission line and the transmission line is properly matched to the antenna. Normally, performance tests concerning impedance match consist primarily of taking standing-wave measurements. In certain instances, it may be found that a change in antenna impedance has resulted in an undesirably high standing-wave ratio. This could be the result of a new antenna installation or an interfering structure near the antenna that influences antenna characteristics.

In practice, the antenna-matching network is varied to match the new antenna characteristics, since the transmission line is designed to match equipment impedance. This can best be done by making a series of standing-wave-ratio checks and antenna-matching adjustments until an acceptable standing-wave

ratio is reached. It must be understood, however, that the antenna does have a specific impedance at a given frequency and that, when necessary, this impedance may be determined by use of an rf impedance bridge.

A typical rf impedance bridge circuit is shown in figure 3-9. Rf impedance bridge measurements require an rf signal generator, a detector, and a calibrated rf bridge to determine transmission-line impedance. The bridge compares the parallel resistive-reactive combination with the series combination and can typically measure impedance over a frequency range of 500 kHz to 60 MHz.

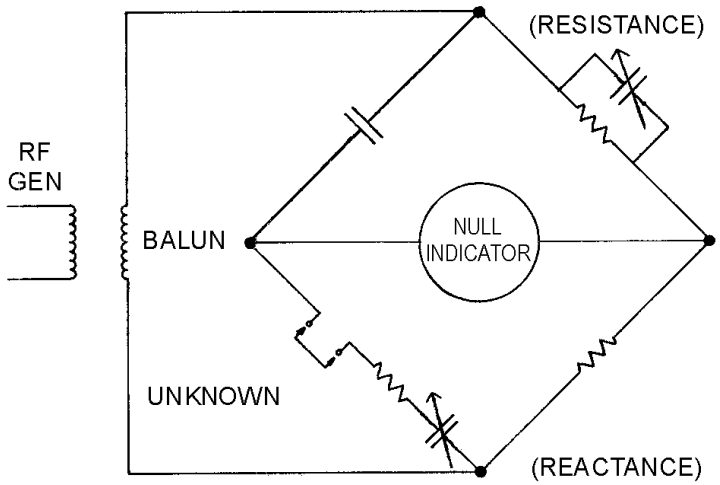

Figure 3-9.—Typical rf bridge.

Basically, the bridge is balanced with a known capacitance under short-circuit conditions. The unknown impedance is then inserted in lieu of the short bus, and the bridge is rebalanced. The difference between the known impedance under short-circuit conditions and the balance measurements obtained with the unknown impedance inserted in lieu of the short is the value of the unknown impedance.

Q-7. What is the result of an impedance mismatch between a receiver or transmitter and its transmission line or antenna?

POWER MEASUREMENTS

It is often necessary to check the input and output signal power levels of electronic equipment. The determination of dc power is computed by using a derivative of Ohm's law ($P = IE = I^2R = E^2/R$). However, the presence of a reactive component in ac circuits means that apparent power is being measured or calculated unless the rms voltage-current value is multiplied by a power factor to obtain true lower. The measurement of ac power is further complicated by the frequency limitations of various power meters. If there is no phase difference, ac power may be computed in the same manner as dc power by determining the average value of the product of the voltage and current. In practical ac circuits, the apparent power must be multiplied by the cosine of the phase angle between the voltage and current in order to compute true power.

In the repeated measurement of audio-frequency (af) power, you may use a normal power meter calibrated directly in watts. However, when reactive components of dissipative impedance introduce a

phase angle, a device that is proportional to both the power factor and the apparent power must be used. Because power-level measurements are concerned with decibel units, a working knowledge of decibels is required for proper interpretation of power tests. The decibel is used to determine the ratio of power changes or to indicate the power level in a circuit with respect to either 0 or a standard reference level.

AF POWER

In the electrical transmission of speech or music, rapidly fluctuating amplitudes and frequencies are involved. The average power-level measurement and its variation rate depend on the signal characteristics and time interval over which this average is taken. Power measurements for af circuits are usually indicated in terms of decibels (dB), decibels referenced to 1 milliwatt (dBm), or volume units (vu). For example, the power gain of an amplifier can be expressed in dB; the power level of a sinusoidal signal compared to a 1-milliwatt reference is indicated in dBm; and the power level of a complex signal, such as voice, music, or multiplexed information, compared to a reference level of 1 milliwatt, is indicated in vu.

Q-8. What are the three units of measure most commonly used when referring to af power measurements?

DECIBEL METERS

A dB meter is a form of ac electronic voltmeter calibrated in dB's. These meters are useful for making measurements where direct indication in decibels is desired. However, remember that these are voltmeters, and power measurements are not meaningful unless the circuit impedance is known. When the dB meter is calibrated, a reference point, based on a specific power or value of voltage across a specified resistance, is selected to represent 0 dB. Many electronic voltmeters use a single dB scale based on 1 milliwatt into a 600-ohm load to represent 0 dBm. Based on this reference point, various voltage readings could be made on the low ac-voltage scale. The +dB numbers corresponding to voltage ratios that exist between successive ranges and the low ac range have been computed for each range. These numbers, shown on the front panel of the instrument, are added algebraically to each successive range reading to produce the correct value for the range. The term decibel does not, in itself, indicate power. It indicates a ratio or comparison between two power levels that permits you to calculate the power. Often, it is more desirable to express performance measurements in terms of decibels using a fixed power level as a reference. The original standard reference level was 6 milliwatts, but to simplify calculations a standard reference level of 1 milliwatt has been adopted.

Q-9. In reference to dB meters, 0 dBm represents 1 milliwatt into what value of load?

VOLUME UNIT METERS

The volume unit (vu) meter is used in audio equipment to indicate input power to a transmitter or to a transmission line. This type of meter has special characteristics, such as a standardized speed of pointer movement, speed of return, and calibration. The measurement of the average power level and its rate of variation with respect to time depends not only on the signal characteristics, but also on the time interval over which the average is being taken. Accordingly, the speed of response of the instrument used to measure average power is of particular concern. The unit of measurement is the volume unit (vu), which is numerically equal to the number of dB above or below the reference level of 1 milliwatt into a 600-ohm load (provided the standard instrument was calibrated under constant-amplitude, sine-wave conditions). A change of one vu is the same as a change of one decibel. Therefore, the vu value obtained represents averages of instantaneous power of speech or music obtained by an instrument having particular dynamic characteristics. The vu readings are equivalent to the power level in decibels only if the sinusoidal waveform is of constant amplitude.

Q-10. What is the main difference between a vu and a dB meter?

ELECTRODYNAMIC WATTMETER

The electrodynamic wattmeter is used to measure power taken from ac or dc power sources. The electrodynamic wattmeter, shown in figure 3-10, uses the reaction between the magnetic fields of two current-carrying coils (or sets of coils), one fixed and the other movable. When the current through the fixed-position field winding(s) is the same as current through the load and the current through the moving coil is proportional to the load voltage, then the instantaneous pointer deflection is proportional to the instantaneous power. Since the moving pointer cannot follow the rapid variations in torque because of its momentum, it assumes a deflection proportional to the average power. The dynamometer-type wattmeter automatically compensates for the power factor error of the circuit under test. It indicates only the instantaneous power resulting from in-phase values of current and voltage. With out-of-phase relationships, a current peak through the moving coil never occurs at the same instant as the voltage peak across the load, resulting in less pointer deflection than when the current and voltage are in phase. The simple meter shown in figure 3-10 is not compensated. When the load is disconnected, this meter will still indicate that power is being consumed in the circuit. This difficulty can be eliminated by incorporating two compensating windings, mounted with the primary fixed-coil current windings, as shown in figure 3-11. These stationary windings are used to produce a magnetic flux proportional to the current through the movable coil. As shown by the arrows, the currents through the primary movable coil and the compensating coil flow in opposite directions, producing a torque caused by the opposing magnetic fields. These opposing fields cancel. Hence, with the load removed from the circuit, the meter will indicate zero power through the load.

Figure 3-10.—Typical electrodynamic wattmeter.

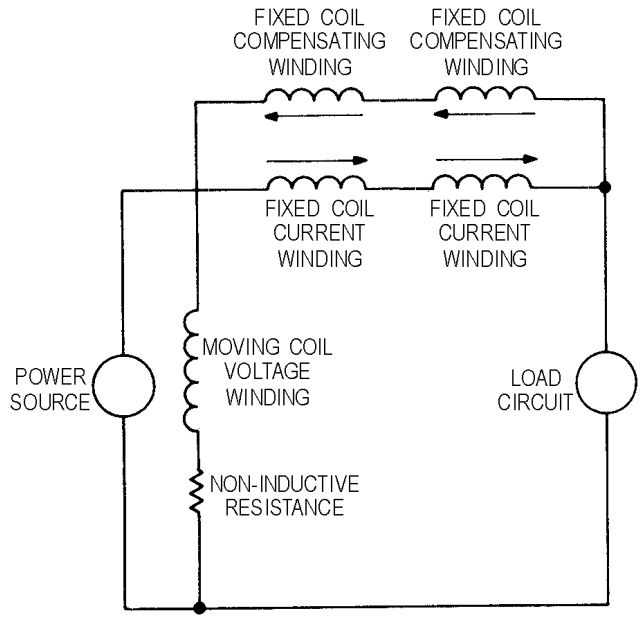

Figure 3-11.—Electrical equivalent of the compensated electrodynamic wattmeter.

Electrodynamic wattmeters are subject to errors arising from various factors, such as temperature and frequency characteristics and vibration. Heat through the control mechanism can cause the springs to lengthen and lose tension; as a result, deflection errors are produced. Figure 3-12 illustrates the mechanical equivalent of the electrodynamic wattmeter. Large currents within the circuit will also produce errors. Therefore, the maximum current range of electrodynamic wattmeters is normally restricted to about 20 amperes. When larger load currents are involved, a current transformer of suitable range is used in conjunction with the wattmeter. However, a current transformer cannot be used if the ac circuit under test contains a dc component.

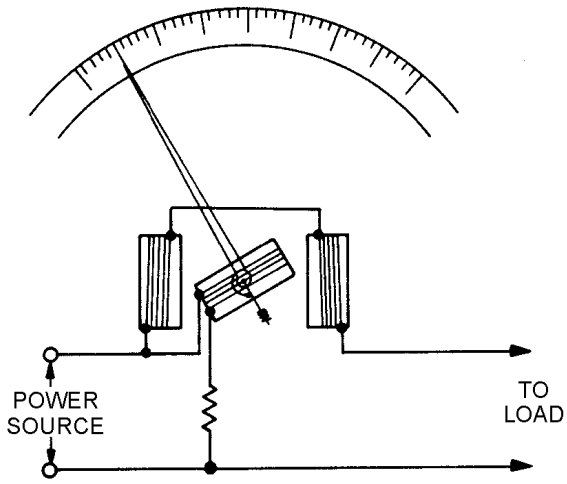

Figure 3-12.—Mechanical equivalent of the electrodynamic wattmeter.

The voltage range of wattmeters is generally limited to several hundred volts because of heat dissipation within the voltage circuit. However, the voltage range can be extended by using external voltage dividers. Wattmeters used as laboratory standards have an accuracy of 0.1%, high-grade portable wattmeters an accuracy of 0.2% to 0.25%, and high-grade switchboard wattmeters an accuracy of 1% of

full-scale value. Because electrodynamic wattmeter errors increase with frequency, they are used primarily for measuring 60-hertz line power. Unshielded electrodynamic wattmeters should not be placed in the vicinity of stray magnetic fields. A wattmeter has current, voltage, and power ratings; therefore, damage may result when any of these ratings is exceeded.

The electrodynamic wattmeter may be converted into an instrument for measuring reactive power by replacing the resistance normally in series with the voltage coil with a large inductance. A 90-degree current lag within the voltage coil provides a direct reading proportional to the reactive power in the circuit. Compensating networks must be used to cause the phase shift to be exactly 90º.

Q-11. What type of device is used to extend the current-measuring capability of electrodynamic wattmeters?

IRON-CORE, COMPOSITE-COIL, AND TORSION-HEAD WATTMETERS

Iron-core wattmeters are primarily used as switchboard instruments and employ the induction principle. Voltage and current coils are wound around a laminated iron core shaped to produce a mutually perpendicular magnetic field across an air gap. Eddy currents induced in a thin metal cylinder rotating in this air gap interact with the magnetic field to produce a torque proportional to the instantaneous power. This type of construction provides the advantages of increased operating torque, larger angles of rotation, ruggedness, compactness, and freedom from errors caused by stray fields. It has the disadvantage of a very narrow frequency range.

The composite-coil wattmeter uses the upscale torque, produced by the ac power being measured, in opposition to the torque produced by an adjustable dc current in a set of windings intermingled or wound within the ac windings. Greater reading precision is obtained with this method than is possible with straightforward wattmeters, and errors caused by elasticity of the spring suspension carrying the moving-coil system are avoided. The torsion-head wattmeter is used to restore the movable coil to its original position after deflection and to remove the mutual inductance error.

ELECTRONIC WATTMETER

Electronic wattmeters are used for direct, small power measurements or for power measurements at frequencies beyond the range of electrodynamometer-type instruments. A simplified electronic wattmeter circuit is shown in figure 3-13. The matched triodes are operated in the nonlinear portion of their characteristic grid-voltage, plate-current curves. The symmetrical resistive T network between the generator and load will provide V1 and V2 voltages proportional to, and in phase with, the load current and voltage, respectively. A source of ac power is connected to the load through the series resistors R1 and R2. These two resistors are of equal value and are made small to prevent the voltage drop across them from reducing the load voltage appreciably. R3 is made large enough to have negligible power consumption. Therefore, the R3 voltage is equal to the load voltage, and the voltage across either series resistor is proportional to the difference in the output currents of the tubes. The average value of the difference could be measured by a dc meter connected to read the voltage potential between the grids of V1 and V2. This method is adequate only at low frequencies. As the frequency increases, the stray capacitances and inductances also increase. The frequency range of the electronic wattmeter can be extended up to 20 megahertz by using pentodes instead of triode tubes. The operating conditions in a pentode are adjusted so that plate current is proportional to the product of a linear function of plate voltage and an exponential function of grid voltage.

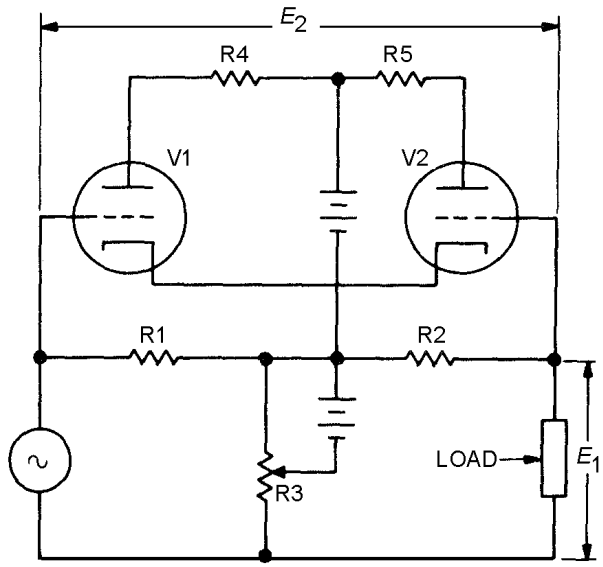

Figure 3-13.—Simple electronic wattmeter circuit.

Q-12. For power measurements, what advantage does an electronic wattmeter have over an electrodynamic wattmeter?

ABSORPTION POWER METERS

Absorption power meters absorb either all or part of the source power. They require means of dissipating the absorbed power, sensing the power thus dissipated, and indicating the amount of power absorbed by the sensing network. Output power meters, in-line wattmeters, and meters employing bolometers are examples of absorption power meters used by the Navy.

Output Power Meters

Figure 3-14 shows a common output power meter used in vhf-uhf applications. It has a 0- to 150-watt range covered in two steps: 0-50 watts and 0-150 watts. Attenuator AT1 provides a 50-ohm nominal resistive (dummy) load and uses metal film on glass construction. This dummy load is tapped to provide the proper operating voltage to the meter. Resistors R3 and R5 form a calibration network at 50 watts; R7 and R8 form a calibration network at 150 watts. Accuracy, at approximately 20º C, is ±5% for frequencies between 30 MHz and 600 MHz, ±10% for frequencies between 0.6 GHz and 0.8 GHz, and ±20% for frequencies between 0.8 and 1.0 GHz. When radio-frequency (rf) power is applied to AT1, this attenuator minimizes the effects of power factors generated by any reactive components. The rf energy is then detected and filtered by CR1 and C1, respectively. The resultant dc voltage, which is proportional to the input power, is applied to a sensitive microammeter via one of the calibration networks. This meter has a scale provided with two ranges: 0-50 watts and 0-150 watts. To protect the meter, you should always try the higher range first. If the value proves to be under 50 watts, a shift to the lower scale would provide improved accuracy.

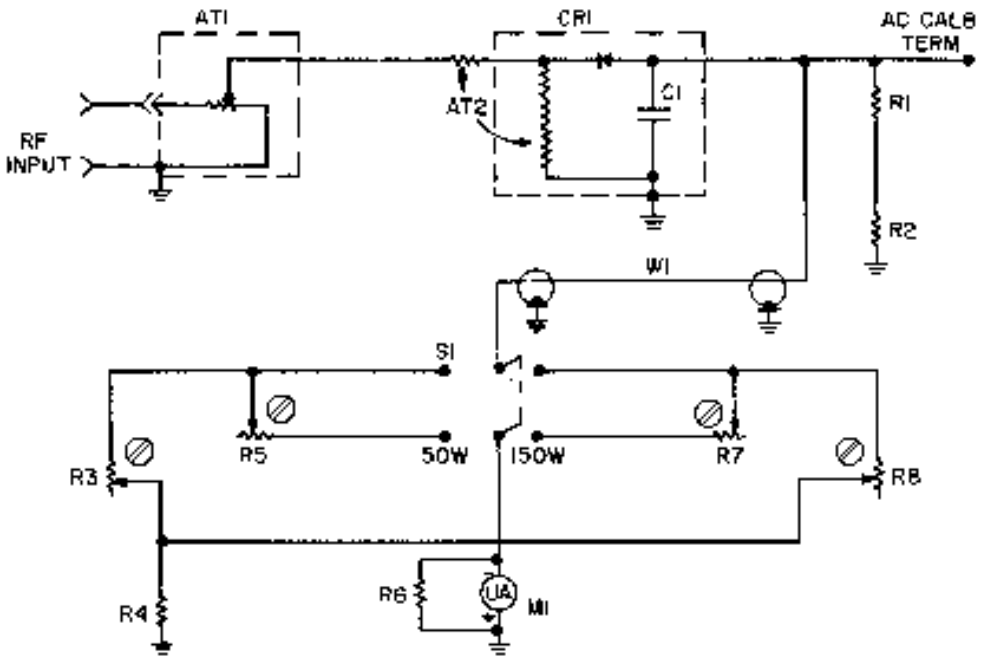

Figure 3-14.—Vhf-uhf wattmeter.

In-Line Wattmeters

The AN/URM-120 in-line wattmeter, shown in figure 3-15, measures power applied to a 50-ohm impedance load and the power reflected from that load. The internal directional coupler is oriented such that it responds only to a wave traveling in one direction on the transmission line. The coupler can be rotated to accommodate either incidental or reflected power. The rf is then rectified, filtered, and applied to the meter, which is scaled in watts. The rf power of 50 to 1,000 watts can be measured between the frequencies of 2 MHz to 30 MHz; and 10 to 500 watts, between the frequencies of 30 MHz to 1,000 MHz.

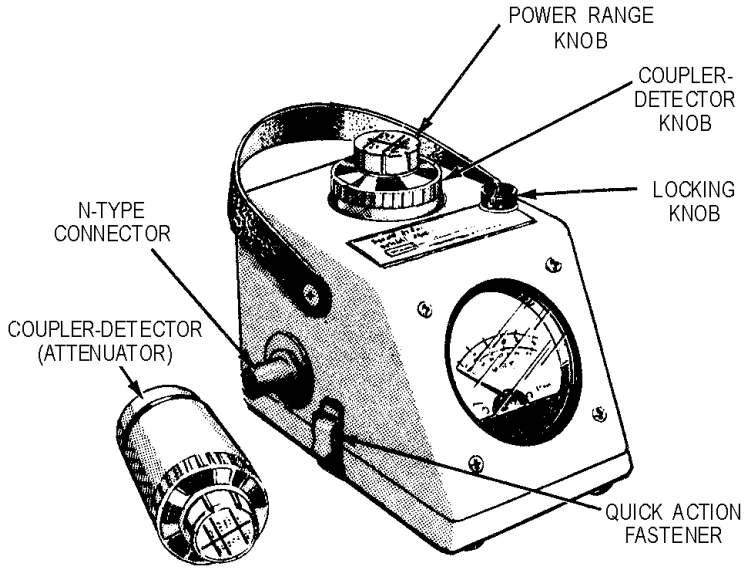

Figure 3-15.—Typical in-line wattmeter.

Q-13. What is the advantage of using in-line wattmeters over output power meters?

Bolometer

A bolometer features a specially constructed element of temperature-sensitive material. The active material is a semiconductor bead supported between two pigtail leads. When rf power is applied to a bolometer element, the power absorption by the element heats the element and causes a change in its electrical resistance. Thus, a bolometer can be used in a bridge circuit so that small resistance changes can be easily detected and power measurement can be accomplished by the substitution method (that is, substitution of dc or low-frequency power to produce an equivalent heating effect). A D'Arsonval meter movement is usually employed as the null indicator.

According to one principle of measurement (the principle used in the balanced bridge), the bridge is initially balanced with low-frequency bias power. Rf power is then applied to the bolometer and the bias power is gradually removed until the bridge is again balanced. The actual rf power is then equal to the bias power removed.

According to another principle of measurement (the principle used in the unbalanced bridge), the bridge is not rebalanced after the rf power is applied. Rather, the indicator reading is converted directly into power by calibration previously performed.

Figure 3-16 illustrates the basic bolometer bridge circuit. The bolometer element must be physically small to be highly sensitive; it must be equally responsive to low-frequency and rf power; and it must be matched to the rf-input power line. The cross-sectional dimension of the bolometer element is approximately equal to the skin depth of rf current penetration at the highest frequency of operation. This condition permits the dc and rf resistivities to be essentially equal with the reactive component of the bolometer impedance at a minimum. Thermistors, which are a type of bolometer, use semiconductor material shaped like a bead, with a thicker skin depth and shorter length to minimize standing-wave effects. These physical properties assure correspondence between lengthwise low-frequency and rf power distribution to provide the necessary inherent accuracy of the bolometer.

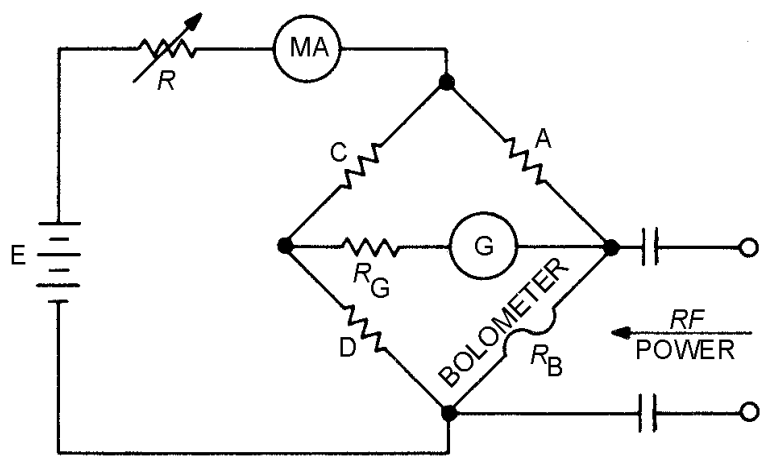

Figure 3-16.—Basic bolometer bridge circuit.

An air-mounted bolometer provides a power sensitivity 100 or more times greater than that provided by static calorimetric devices. Additional sensitivity may be obtained by mounting the element within an evacuated envelope to eliminate convective heat loss. The small size of bolometer elements is associated with small thermal mass and short thermal time constants. The thermal time constant varies directly with the volume-to-area ratio of the element for a particular shape and composition. Typical time is up to 0.1

second for thermistor beads. The thermistor type of bolometer element is usually composed of a ceramic-like mixture of metallic oxides having a large negative temperature coefficient of resistance. Two fine platinum-alloy wires are embedded in the bead, after which the bead is heated and coated with a glass film. Typical dimensions of a thermistor bead used for microwave measurements are 0.015 inch along its major axis and 0.010 inch along its minor axis. The thermistor bead may be operated at high temperatures; it is rugged, both electrically and mechanically; it has high resistance-power sensitivity; and it has a good temperature-power sensitivity. In addition, it can endure large pulse energies; it has a sluggish thermal response; and it has negligible pulsed-power measurement errors. The more sensitive thermistor requires thermal shielding or heat compensation for best operation.

Q-14. What type of material is used in the construction of bolometers and thermistors?

Bolometer Power Meter

The standard power meter used in the Navy (Hewlett-Packard 431 C) is an automatic self-balancing instrument employing dual-bridge circuits. It is designed to operate with temperature-compensated thermistor mounts that enable you to measure power in a 50-ohm coaxial system from 10 MHz to 18 GHz and in a waveguide system from 2.6 GHz to 40 GHz. This power meter can be operated from either an ac or a dc primary power source. The ac source can be either 115 or 230 volts at 50 to 400 hertz. The dc source is a 24-volt rechargeable battery. A seven-position range switch allows full-scale power measurements of 10 microwatts to 10 milliwatts or of −20 dBm to +10 dBm. These ranges can be further extended with the aid of attenuators. The thermistor mount (as shown in fig. 3-17) contains two thermistors: one in the detection bridge, which absorbs the microwave power to be measured, and the other in the compensation and metering bridge, which supplies temperature compensation and converts the measured rf power to a meter indication. Each bridge includes its respective thermistor element as a bridge arm.

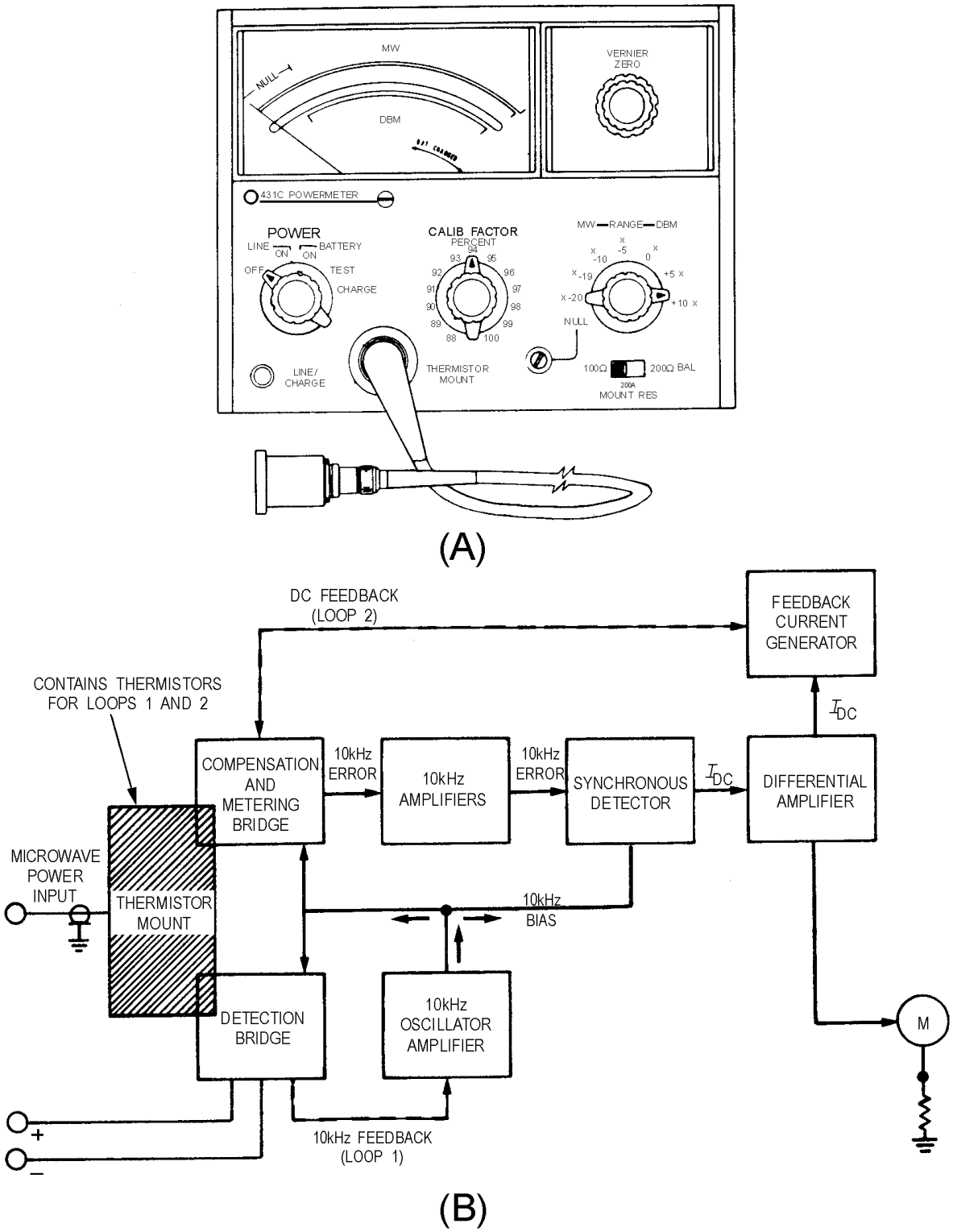

Figure 3-17.—Power meter.

Basically, the power meter circuit consists of two bridges; each bridge includes one of the thermistor elements as a bridge arm. The bridges are made self-balancing through the use of feedback loops. Positive or regenerative feedback is used in feedback loop 1; degenerative (negative) feedback is used in feedback

loop 2. Both bridges are excited by a common 10-kHz source. The 10-kHz amplifier-oscillator supplies 10-kHz power to bias the thermistor in feedback loop 1 to produce the resistance required to balance the rf bridge. An equal amount of 10-kHz power is supplied by the same oscillator to the second thermistor in feedback loop 2 through two series-connected transformers. Feedback loop 2 balances the meter bridge. When rf is applied to the thermistor in the detection bridge (but not to the compensation and metering bridge), an amount of 10-kHz power is present, equal to the rf power being removed from the detection bridge by the self-balancing action of the bridge. Since the rf power replaced the 10-kHz power, the detection bridge is in balance; however, the metering bridge must be balanced by its separate feedback loop. Sufficient dc power to equal the 10-kHz power lost by the metering bridge is automatically replaced, balancing this loop. Hence the dc power applied to the metering bridge thermistor is equal to the microwave power applied to the detection bridge. The meter circuit senses the magnitude of the feedback current. The resultant meter current passes through a differential amplifier to the indicating meter. The two thermistors are matched with respect to their temperature characteristics; therefore, there is only a very small amount of drift of the zero point with ambient temperature changes. When there is a change in temperature, there is a change in the electrical power needed by the thermistors to maintain constant operating resistances. This change is automatically performed by feedback loop 1, which changes the amount of 10-kHz power for both thermistors by the proper amount. The dc power in feedback loop 2 is not changed; and since it is this dc power that is metered, the temperature change has not affected the meter indication.

CALORIMETERS

The calorimeters are the most accurate of all instruments for measuring high power. Calorimeters depend on the complete conversion of the input electromagnetic energy into heat. Direct heating requires the measurement of the heating effect on the medium, or load, terminating the line. Indirect heating requires the measurement of the heating effect on a medium or body other than the original power-absorbing material. Power measurement with true calorimeter methods is based solely on temperature, mass, and time. *Substitution* methods use a known, low-frequency power to produce the same physical effect as an unknown rf power being measured. Calorimeters are classified as STATIC (nonflow) types and CIRCULATING (flow) types.

Q-15. Power measurements performed with calorimeters are based on what three variables?

Static Calorimeters

The static calorimeter uses a thermally shielded body. Since an isolated body loses little heat to a surrounding medium, the temperature increase of the body is in direct proportion to the *time* of applied power. The product of the rate of temperature rise in the calorimetric body and its heat capacity equals applied power. Figure 3-18 illustrates a static-type calorimeter.

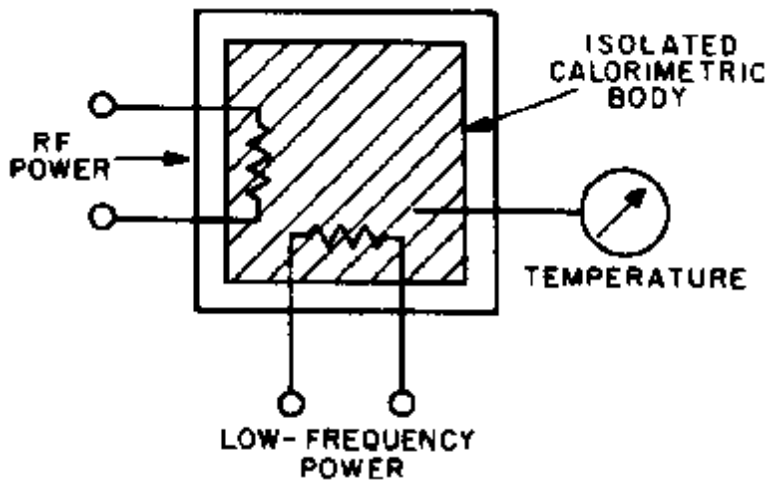

Figure 3-18.—Static calorimeter using low-frequency power substitution.

The most common type of static calorimeter is the ADIABATIC calorimeter. In the adiabatic meter, power is applied directly to a thermally isolated body; and the rate of temperature rise is determined from a temperature change measurement during a sufficiently long, known time interval. Figure 3-19 illustrates an adiabatic calorimeter using water as the body contained in a covered Dewar flask. A tapered-wall, open-ended waveguide contains a sealed, inclined glass partition to create a wedge-shaped water load of low-reflection coefficient. Thorough mixing of the water is accomplished with a stirrer, and a sensitive thermometer measures the temperature rise. A heating coil is wound around the waveguide inside the calorimeter and is used for calibrating purposes when low-frequency power is applied. This type of meter can be used for accurate measurement of several hundred watts of average power and can withstand 50 kilowatts of peak power.

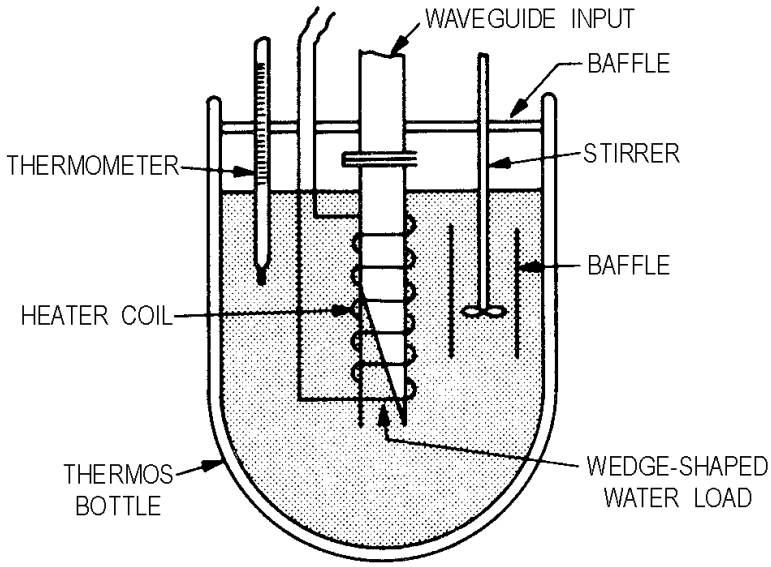

Figure 3-19.—Adiabatic calorimeter.

The NONADIABATIC calorimeter uses an rf termination with a resistive film strip or LOSSY dielectric materials (solids or liquids that are designed to efficiently dissipate the applied power) as a load. Temperature indication can be accomplished with thermocouples, thermopiles, thermistors, thermometers, bimetallic strips, and manometers. Calibration is against a power standard or known low-frequency power.

Based on the above principle, a coaxial calorimeter of good sensitivity with a short, 50-ohm resistive film on a lava (dielectric) center conductor, enclosed within a tapered, thin-walled outer conductor, is used for frequencies between 0 and 1.2 GHz. The rf termination is electrically connected to, but thermally isolated from, a massive mounting plate by a short section of silvered-lava coaxial line with a high thermal resistance. The steady-state temperature rise of the outer casing of the load with respect to the mounting plate is measured by a differential platinum-resistance thermometer in a Wheatstone bridge. Low-frequency power applied to the termination provides a method of calibration. Power in the range of 0 to 2.5 watts may be measured. A 70-second time constant and steady-state temperatures are attained in about 6 minutes. The small physical size of termination (to keep convective and radiative heat losses low) provides high sensitivity. Calibration with lower frequency power is extremely accurate, because the termination is broadband and should exhibit the same power distribution from dc to 10 gigahertz.

A twin calorimeter provides a method of using two calorimetric bodies thermally shielded against ambient temperature variations and improves sensitivity. Figure 3-20 illustrates this type of calorimetric device. The power to be measured is applied to one calorimetric body; the other calorimetric body acts as a temperature reference. The steady-state temperature difference between the two calorimeters is used as a measure of rf power. Calibration is performed by applying low-frequency power. A differential-air, thermometer-type temperature difference indicator, shown in figure 3-21, is used with a twin calorimeter to measure microwave power in the 0.1-mW range. This instrument consists of two similar glass cells connected by a capillary tube containing a liquid pellet. Each glass cell contains a tapered, carbon-coated strip; and the entire assembly is mounted in a rectangular waveguide. Balancing dc power heats one strip; the other strip is heated by rf power. The liquid pellet, which indicates the differential expansion of the air within the two cells, is viewed through an aperture in the waveguide wall, preferably with a microscopy for highest sensitivity. This procedure permits a 2% accuracy at 10 mW.

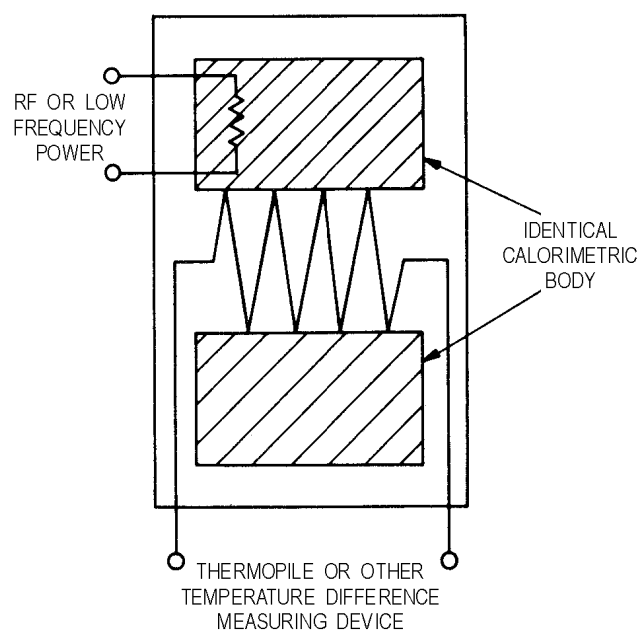

Figure 3-20.—Twin calorimetric system.

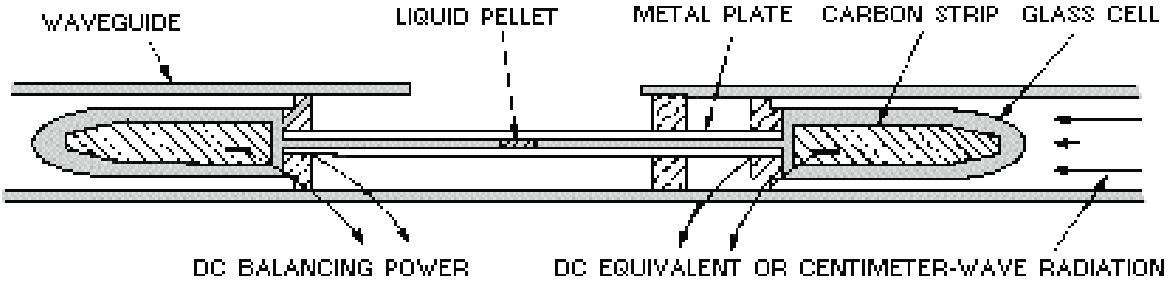

Figure 3-21.—Differential-air, thermometer-type calorimeter.

Flow Calorimeters

Flow calorimeters are classified by the type of circulating method used (open or closed), the type of heating used (direct or indirect), and the type of measurement performed (true calorimetric or substitution). Water or other calorimetric fluid is used only once in an open system. An overflow system is used to maintain a constant rate of flow. Closed systems recirculate the fluid continuously by means of a pump, and a cooling system restores the fluid to ambient temperatures prior to its return to the calorimeter. Closed systems are more elaborate and permit the use of fluids other than water.

Flow calorimeters provide the primary standards for the measurement of high power levels; and, in conjunction with calibrated directional couplers, attenuators, power dividers, or other similar devices serve to standardize medium- and low-power measuring instruments. The measurement time depends on the required time for the entering fluid to reach the outlet, where the rise in temperature is measured. The circulating fluid may serve in a dual capacity as the dissipative medium and coolant, using the direct heating method, or solely as a coolant, using the indirect heating method. Because of its excellent thermal properties and high dielectric losses at 1 GHz or higher, water is normally used in both heating methods. Water is rarely used as the fluid at frequencies lower than 100 MHz, because of insufficient dielectric losses. The indirect heating method offers a wider frequency and power-range coverage and can be used in substitution-type measurements.

True calorimetric measurements contain appreciable error, because of nonuniformity of flow rate, air bubbles, flow-rate measurement inaccuracies, and temperature rise. Flow regulators, bubble traps, and good thermal insulation are required to eliminate the majority of these errors. Substitution methods do not involve direct heat dissipation measurement of moving fluid. Greater accuracy is obtained because known low-frequency power is substituted for the unknown rf power, with all other measurement parameters remaining constant. The accuracy depends on the exactness of the low-frequency power determination and the degree to which factors remain fixed during the substitution of one type of power with another.

Figure 3-22 illustrates a flow calorimeter using low-frequency power substitution. Two different measurement techniques are possible with this type of meter: the calibration technique and the balance technique. The CALIBRATION TECHNIQUE uses an adjustable known power to exactly reproduce the same temperature indication originally obtained by the unknown rf power measurement. The BALANCE TECHNIQUE uses an initial low-frequency power (P_1) to provide a steady-state temperature rise in the calorimetric fluid. When unknown rf power is applied, the original power (P_1) is reduced to a new power (P_2) to maintain the same temperature indication. Therefore, the actual power equals P_1 minus P_2. Figure 3-23 illustrates a widely used method of power measurement using a balanced-flow calorimeter. Temperature-sensitive resistors are bridge-connected as the thermometric elements and are balanced at ambient temperature prior to the application of power. Low-frequency balancing power and the unknown

rf power are applied to maintain the bridge at null. This occurs when the temperature rise caused by the unknown rf power equals the temperature rise caused by the known low-frequency power.

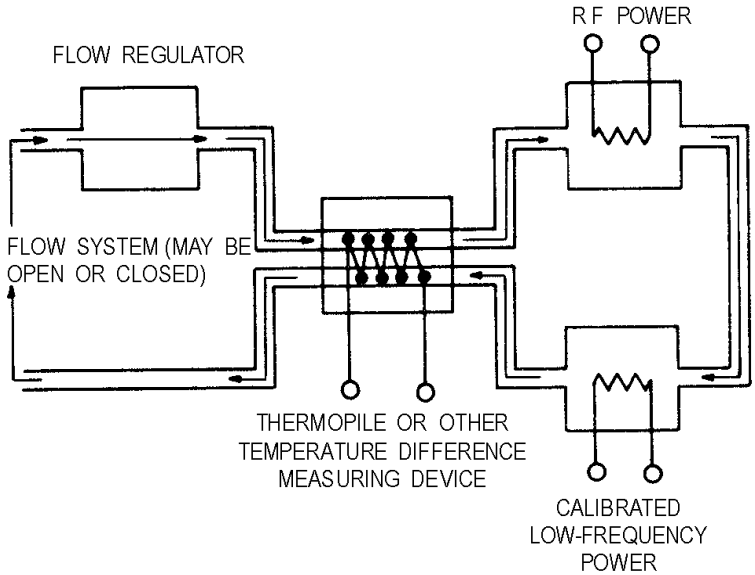

Figure 3-22.—Flow calorimetric system using substitution at low-frequency power.

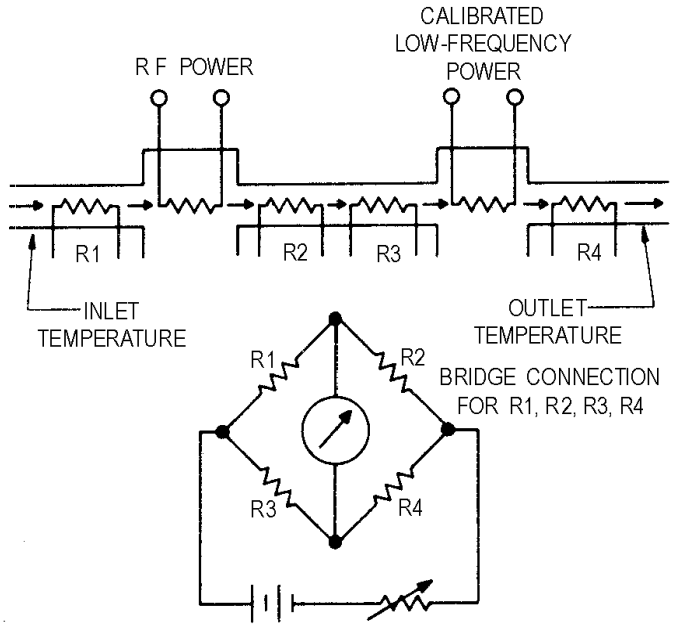

Figure 3-23.—Balanced-flow calorimeter.

Q-16. What is the result of applying power to a calorimeter?

FREQUENCY MEASUREMENTS

Frequency measurements are an essential part of preventive and corrective maintenance for communication and electronic equipment. Rotation frequencies of some mechanical devices must be determined; the output frequency of electric power generators is checked when the engine is started and during preventive maintenance routines; carrier equipment that operates in the audio-frequency range must be adjusted to operate at the correct frequencies; and radio transmitters must be accurately tuned to the assigned frequencies to provide reliable communications and to avoid interfering with radio circuits operating on other frequencies. These are only a few of the applications for making frequency measurements.

FREQUENCY-MEASUREMENT METHODS

Frequency-measuring equipment and devices, particularly those used to determine radio frequencies, constitute a distinct class of test equipment, because of the important and critical nature of such measurements. The requirement of precise calibration is extremely important in all frequency-measuring work. To provide accurate measurements, every type of frequency-measuring device must be calibrated against some frequency standard.

FREQUENCY STANDARDS

Of considerable importance in the measurements of frequency or wavelength are the standards against which frequency-measuring devices are compared and calibrated. Frequency standards belong to two general categories: primary and secondary standards. The PRIMARY FREQUENCY STANDARD maintained by the U.S. National Bureau of Standards has long-term stability and an accuracy of 1 part in 10^{12}, using an atomic clock. A SECONDARY FREQUENCY STANDARD is a highly stable and accurate standard that has been calibrated against the primary standard. Secondary standards are maintained by calibration laboratories that service your test equipment.

The National Bureau of Standards provides time and frequency standards from station WWV at Fort Collins, Colorado, and from station WWVH at Kekaha, Kauai, Hawaii. The following technical radio services are given continuously by these stations:

- Standard radio frequencies
- Standard audio frequencies
- Standard time intervals
- Standard musical pitch
- Time signals
- Radio propagation notices (WWV only)
- Geophysical alerts
- Universal Time Coordinated (UTC)
- + UT^1 Corrections

The UTC scale uses the ATOMIC SECOND as a time interval. UT^1 is based on the earth's uniform rate of rotation. Since the earth's rotation is not precisely uniform, UT^1 is an adjustable interval.

To ensure reliable coverage of the United States and extensive coverage of other parts of the world, radio stations WWV and WWVH provide the primary standard radio frequencies listed in table 3-1. The transmission of WWV and WWVH are interrupted for 5 minutes of each hour. The silent period begins at 15 minutes past the hour for station WWVH and 45 minutes past the hour for station WWV. These silent periods are provided to eliminate errors caused by interference.

Table 3-1.—NBS Frequency Standards and Time Transmission

TRANSMISSION	WWV	WWVH
RF Signal Frequency MHz	5, 10, and 15	5, 10, and 15
Frequency Stability	1 part in 1011	1 part in 1011
Frequency Deviation	1 part in 1012 per day	1 part in 1012 per day
Seconds Frequency and Duration	5 cycles of 1000Hz for .005 seconds	6 cycles of 1200Hz for .005 seconds
Audio Tones	600Hz and 500Hz with 440Hz to mark the hour	600Hz and 500Hz with 440Hz to mark the hour
Frequency Accuracy	1 part in 1012	1 part in 1012
Propagation Forecast	14 min. past the hour (in voice)	None

Two primary standard audio-frequency tones (440 Hz and 600 Hz) are broadcast on all WWV and WWVH carrier frequencies. In the absence of a message, a 500-Hz tone is broadcast during the message interval. The 440-Hz signal that denotes the 1-hour mark is the standard musical pitch, A above middle C. The 600-Hz tone provides a frequency standard for checking the 60-Hz power-line frequency.

The standard time pulse marking interval of 1 second consists of five cycles of a 1,000-Hz tone at WWV and six cycles of a 1,200-Hz tone at WWVH. These marker pulses are heard as clock ticks. Intervals of 1 minute are marked by a 0.8-second, 100-Hz tone for WWV and a 0.8-second, 1,200-Hz tone for WWVH. Each hour is marked by a 0.8-second, 1,500-Hz tone on both stations. Universal Time Coordinated (UTC) is announced on WWVH between the 45 and 52.5 seconds of each minute and on WWV between the 52.5 and 60 seconds of each minute.

An announcement of radio propagation conditions (geophysical alert) for the North Atlantic area is broadcast by station WWV in voice at 18 minutes after each hour. For example, these short-term announcements might state, "The radio propagation quality forecast at ... (normal, unsettled, disturbed)." The propagation format is repeated phonetically and in numerical code to ensure clarity. The letter designations N, U, and W, signifying "normal," unsettled," and "disturbed," respectively, classify the radio propagation conditions at the time of the broadcast. The digits from 1 to 9 indicate the expected radio propagation conditions during the next 6 hours; refer to table 3-2 for code interpretations. The National Bureau of Standards forecasts are based on information obtained from a worldwide network of geophysical and solar observations.

Table 3-2.—NBS Radio Propagation Coding

PHONETIC	PROPAGATION CONDITION
Whiskey	Disturbed
Uniform	Unsettled
Normal	Normal
NUMERAL	
1	Useless
2	Very poor
3	Poor
4	Poor to fair
5	Fair
6	Fair to good
7	Good
8	Very good
9	Excellent

Q-17. What government agency is responsible for monitoring our primary frequency standards?

MECHANICAL ROTATION AND VIBRATION METHODS

There are many instances when you are very much concerned with the question of rotational or vibratory speeds. Knowledge of rotational speeds is necessary where the output of a direct current generator has fallen below a minimum desired output or where the speed of a motor (such as the motor in a teletypewriter or radar antenna) must be maintained at a constant value. There are many instruments that you can use for this purpose, such as tuning forks, stroboscopes, vibrating-reed meters, and electromechanical counters. The oscilloscope and the frequency counter are two of the other devices which may be used, but their use may require the employment of accessory equipment.

Tuning Fork Methods

A tuning fork is generally used in conjunction with the measurement of the rotational speed of a teletypewriter or facsimile motor but is not limited to this application. However, you must remember that the tuning fork can be used at only one frequency, the frequency of vibration for which it was manufactured, and therefore cannot be used on variable-speed motors. To use the tuning fork, you direct a source of light upon the point to be observed. In the case of a teletypewriter, a black-and-white segmented target is painted on the outer circumference of the motor governor. Radial spokes in a flywheel could be used equally well. Permit the motor to reach operational speed under normal load conditions; otherwise, the motor will slow down considerably when the normal load is applied. Strike the tuning fork against the side of your hand to set it into vibration. Then observe the target through the slots in the plates attached to the tines of the fork. The correct speed is obtained when the segments of the target appear to be stationary. If the segments seem to move backward, apparently against the known motor rotational direction, the speed is too low. If the segments seem to move forward, the speed is too high. There is also the possibility that the target segments will appear to jump back and forth or to disappear suddenly. Such erratic action is often because of governor malfunctioning. The correct speed adjustment is reached when the targets appear to be stationary.

Q-18. What is the primary measurement application for tuning forks?

Stroboscope Methods

When using a stroboscope to measure the speed of rotating or reciprocating mechanisms, hold the instrument so that the light from the stroboscope lamp falls directly on the part to be observed. If the part is uniform, or symmetrical, place an identification mark with chalk or a grease pencil on the portion to be observed. This method provides a positive means of identification, because if only one reference mark is observed during measurement, you can be sure that either the fundamental synchronization or a submultiple thereof has been obtained. If the approximate speed of rotation is known, the stroboscope controls may be set to the appropriate positions prior to actual measurement. The main frequency control that determines the rate of the flashing light is then varied until the reference mark on the moving part appears to be standing still. The calibrated scale of the stroboscope will then show the speed directly in revolutions per minute (rpm).

If you have no idea of the speed of the moving part, it is best to start the measurement procedure at the highest frequency that the stroboscope can deliver. The flashing rate of the stroboscope can then be gradually reduced until a single stationary image of the reference mark is obtained. This is the point of fundamental synchronism that corresponds to the speed of the moving part. Do not continue to reduce the flashing rate of the instrument beyond this point without a valid reason for doing so. If you do continue the reduction, a stationary image will still be observed, but the stroboscope will indicate a submultiple of the true rotational speed; thus, a measurement error will be introduced.

Stroboscopes generally have a high- and low-range switch. The typical low range is from 600 to 3,600 rpm, and the upper range is from 3,600 to 15,000 rpm; there is a slight overlap in ranges to ensure reliable frequency coverage. In view of the limitation imposed by flasher tube life, the stroboscope should always be operated at a flashing rate that is as low as possible, consistent with the rotational speed of the observed part. If you should be required to operate this instrument over a long period of time, use a submultiple of the fundamental synchronous speed. The pattern will remain just as stationary, and the tube life will be greatly extended. In addition, the quality of the light is better at the lower ranges than at the upper end of the scale. Sometimes you will encounter a rotating or vibrating device that is moving faster (or slower) than the measuring range of the stroboscope will accommodate. Although such speeds can still be measured, you must use the multiple or submultiple synchronism points.

There are two methods of measuring high speeds. The first method is to obtain a single stationary image of the rotating object at a subharmonic speed relationship and to record that value as *A*. Then obtain a second single stationary image at the next lower subharmonic speed relationship, and record this value as *B*. The unknown speed may then be computed from the following formula:

$$\text{unknown speed} = \frac{A \times B}{A - B}$$

For example, assume reading *A* was 4,000 rpm and reading *B* was 3,500 rpm. The computation would be as follows:

$$\text{unknown speed} = \frac{(4 \times 10^3)(3.5 \times 10^3)}{(4 \times 10^3) - (3.5 \times 10^3)}$$

$$\text{unknown speed} = \frac{14 \times 10^6}{5 \times 10^2}$$

$$\text{unknown speed} = 28,000 \text{ rpm}$$

The second method is used where the value of $A \times B$ becomes progressively smaller. The A reading is obtained as in the previous example (for the sake of easier computation, suppose that the *A* reading is still 4,000 rpm). Then obtain another submultiple reading for *B*, keeping in mind the number of times a stationary single image was observed. If a stationary single image was observed seven different times and the final *B* reading was 2,000 rpm, the calculation would become as follows:

$$\text{unknown speed} = (N_x)\frac{AB}{A - B}$$

$$\text{unknown speed} = (7_x)\frac{(4 \times 10^2)(2 \times 10^2)}{(4 \times 10^2) - (2 \times 10^2)}$$

$$\text{unknown speed} = (7_x)\frac{8 \times 10^6}{2 \times 10^3}$$

$$\text{unknown speed} = 28,000 \text{ rpm}$$

At speeds lower than the lowest range of the stroboscope, multiple images will be observed. For example, assume a dial reading of 900 rpm was obtained when two stationary images were observed. Then dividing the rpm by the number of images will give the unknown shaft speed, as shown below:

$$\text{unknown speed} = \frac{900}{2} = 450 \text{ rpm}$$

WARNING

Exercise caution in using a stroboscope. The *illusion* of stopped motion is very convincing. Do not attempt to touch the moving equipment.

Q-19. If you are required to monitor the speed of a device with a stroboscope over an extended period of time, what step should be taken to prolong the life of the flasher tube?

Frequency Counter Methods

Various frequency counters have found application as an ELECTRONIC TACHOMETER to obtain accurate measurements of high-speed rotating machinery. A tachometer pickup may be used to produce signals that are fed directly to the frequency counter. If the tachometer pickup is designed to generate 1 signal per revolution, the counter will indicate directly in revolutions per second; if the pickup is designed to produce 60 signals per revolution, the counter will indicate directly in revolutions per minute.

AUDIO-FREQUENCY MEASUREMENTS

Audio-frequencies can be measured with a variety of nonelectronic and electronic devices.

Examples of nonelectronic measuring devices are the vibrating-reed meter and the moving-disk frequency meter. (Both of these devices were discussed in NEETS, module 3.) They are used primarily to measure the frequency of ac power, 60 Hz. However, such instruments do not have a wide frequency range. The most common instruments available for the measurement of audio frequencies are oscilloscopes and frequency counters.

OSCILLOSCOPE METHOD

The frequency of a waveform can readily be determined by using an oscilloscope. The most common oscilloscope method of measuring a frequency is accomplished by first measuring the time duration of the waveform. Frequency is the reciprocal of time

$$f = \frac{1}{t}$$

and may be easily computed, as shown in figure 3-24.

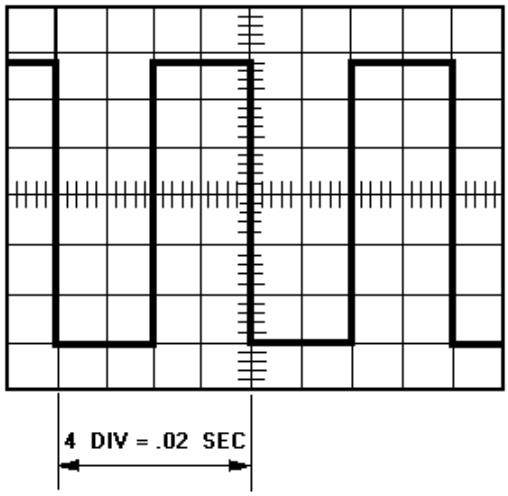

NOTE: TIME/DIVISION SWITCH SET
FOR .005 SEC/DIV

$f = \frac{1}{t} = \frac{1}{.02}$ OR 50Hz

Figure 3-24.—Oscilloscope method of determining frequency.

Another common method of determining the frequency of a waveform is by using Lissajous patterns. This method was discussed in NEETS, module 19.

FREQUENCY COUNTER METHOD

While oscilloscopes can be used to compare rectangular waveforms for the purpose of measuring the frequency of a signal, frequency counters, as shown in figure 3-25, are much more useful for this purpose. The fundamental measurement of frequency is accomplished by totaling the number of cycles into the counter for a precise period of time. The result is then displayed as an exact digital readout. The audio-frequency signal must be of sufficient amplitude to trigger the counter. The AUTO-MANUAL switch provides two methods of frequency counter operation. One method is to initiate the count simultaneously with the initiation of the signal to be measured. With this method, the AUTO-MANUAL switch should be set to the MANUAL position. The second method assumes that the signal to be measured has been operating over some indefinite period of time and that it will continue to do so after a measurement has been taken (hence, only that segment of the signal required to make the frequency measurement is important). With this method, the AUTO-MANUAL switch is to be set to the AUTO position.

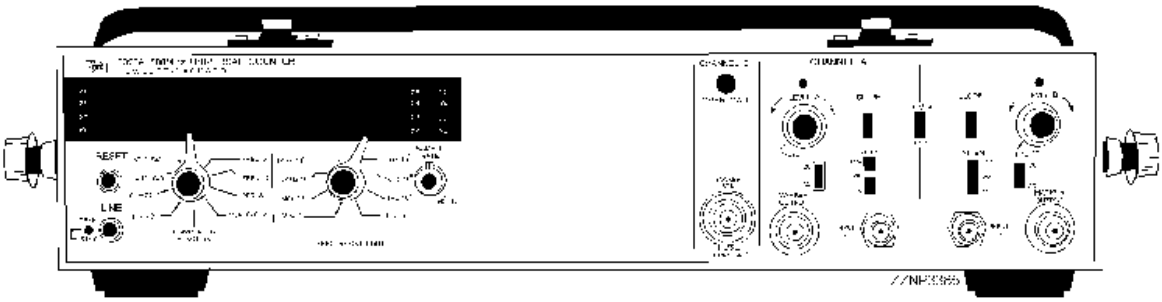

Figure 3-25.—Frequency counter.

RADIO-FREQUENCY (RF) MEASUREMENTS

Radio-frequency measurements are primarily made with frequency counters. Most oscilloscopes are limited in use to approximately 100 MHz. Frequency meters, such as the Hewlett-Packard 530 series, are widely used but lack the accuracy of frequency counters.

Frequency Meters

Prior to the invention of the frequency counter, most frequency measurements above the af range were made primarily with frequency meters.

This process involved heterodyning the frequency to be measured against the calibrated output of the frequency meter to obtain a zero beat from which the measured frequency was then read. This method proved inaccurate because of reading errors.

Frequency meters as we know them today are entirely different from their predecessors. Today's frequency meters (fig. 3-26) contain waveguide or coaxial lines coupled to quarter-wavelength resonant cavities. The meter is adjusted until the cavity is tuned to the resonant frequency of the signal being measured. At resonance, power is absorbed by the cavity and produces a dip in the output-power level, as measured at the frequency meter's output connector. The resonant frequency is read directly from the frequency meter dial and is accurate, in most cases, to approximately ±0.2%. Frequency meters are capable of measuring frequencies in the range of 1 to 40 gigahertz, far exceeding the frequency limitations of the average frequency counter.

Q-20. What happens when a frequency meter is adjusted to the frequency of the signal being measured?

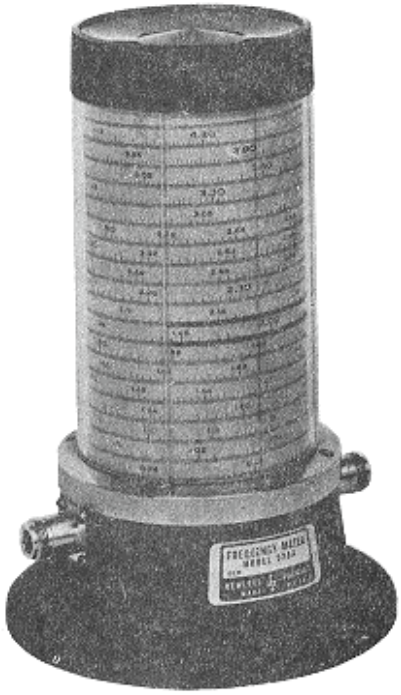

Figure 3-26.—Frequency counter.

Frequency Counters

In the early 1950s, the frequency counter was developed. The device could measure and accurately indicate frequencies up to 10 MHz. Present-day frequency counters can accurately read frequencies as high as 40 GHz. In addition to direct frequency measurement indication, some types of frequency counters can measure the WAVE PERIOD, which is the inverse of frequency; RATIO, which compares one frequency against another; and TIME INTERVAL, the time between two events or the time between two functions of an event. In addition, frequency counters can totalize event indications. This is similar to measuring the frequency except that a manual or an electronic start-stop gate controls the time over which the measurement is taken. Frequency counters can also provide scaling in the form of a digital output signal from the frequency counter that represents a frequency-related division of the input frequency.

All of the above functions have useful applications. For pulse timing, the period function is used; totalizing is used in digital applications; and ratio is used in comparing harmonic-related signals. Scaling is used for triggering other test equipment used in conjunction with the frequency counter; and time-interval capability is used in measuring the interval between two pulses or between two sets of pulses. Because of the wide variety of frequency counters in use, the technical manual for a specific frequency counter should be consulted to determine the instrument's full capabilities.

Frequency Counter Accuracy

All frequency counter measurements are measured with 1 part in 10^8 of accuracy. However, frequency counters have provisions for input from external frequency standards. This extends the accuracy of the frequency to that of the standard. A frequency self-check capability is provided to determine if the counting and lighting circuits are operating properly.

Wavemeters

Wavemeters are calibrated resonant circuits used to measure frequency. Although the accuracy of wavemeters is not as high as that of heterodyne frequency meters, they have the advantage of being comparatively simple and can be easily carried about.

Any type of resonant circuit may be used in wavemeter applications. The exact kind of circuit employed depends on the frequency range for which the meter is intended. Resonant circuits consisting of coils and capacitors are used for low-frequency wavemeters. Butterfly circuits, adjustable transmission line sections, and resonant cavities are used in vhf and microwave instruments.

There are three basic kinds of wavemeters: the absorption, the reaction, and the transmission types. Absorption wavemeters are composed of the basic resonant circuit, a rectifier, and a meter for indicating the amount of current induced into the wavemeter. In use, this type of wavemeter is loosely coupled to the circuit to be measured. The resonant circuit of the wavemeter is then adjusted until the current meter shows a maximum deflection. The frequency of the circuit under test is then determined from the calibrated dial of the wavemeter.

The reaction type derives its name from the fact that it is adjusted until a marked reaction occurs in the circuit being measured. For example, the wavemeter is loosely coupled to an oscillator, and the resonant circuit of the meter is adjusted until it is in resonance with the oscillator frequency. The setting of the wavemeter dial is made by observing the output current of the oscillator. At resonance, the wavemeter circuit takes energy from the oscillator, causing the current to dip sharply. The frequency of the oscillator is then determined from the calibrated dial of the wavemeter.

The transmission wavemeter is an adjustable coupling link. When it is inserted between a source of rf energy and an indicator, energy is transmitted to the indicator only when the wavemeter is tuned to the frequency of the source. Transmission wavemeters are widely used in measuring microwave frequencies.

In figure 3-27, a typical cavity wavemeter is illustrated.

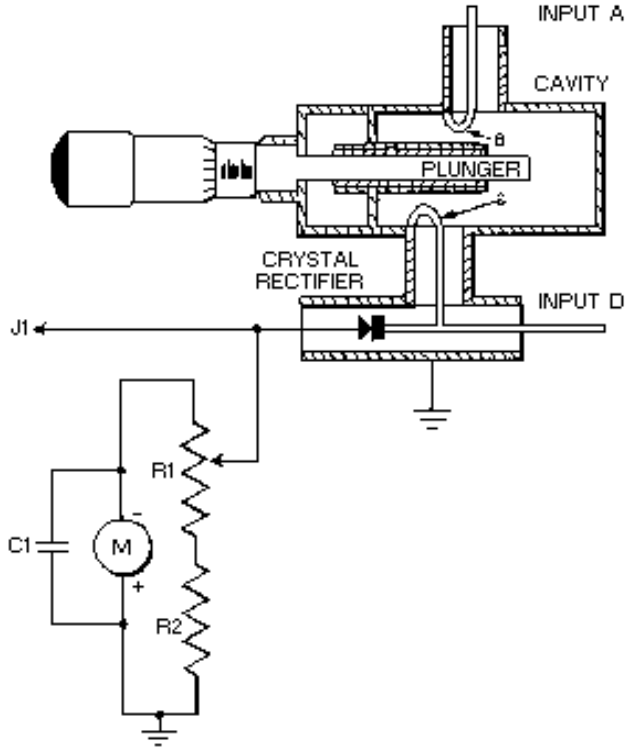

Figure 3-27.—Typical cavity wavemeter.

The wavemeter illustrated is of the type commonly used for the measurement of microwave frequencies. The device employs a resonant cavity, which effectively acts as a high-Q LC tank circuit. The resonant frequency of the cavity is varied by means of a plunger that is mechanically connected to a micrometer mechanism. Movement of the plunger into the cavity reduces the cavity size and increases the resonant frequency. Conversely, an increase in the size of the cavity (made by withdrawing the plunger) lowers the resonant frequency. The microwave energy from the equipment under test is fed into the wavemeter through one of two inputs, A or D. A crystal rectifier then detects or rectifies the signal, and the rectified current is indicated on the current meter, M.

The instrument can be used as either a transmission type or an absorption type of wavemeter. When used as a transmission wavemeter, the unknown signal is coupled into the circuit by means of input A. When the cavity is tuned to the resonant frequency of the signal, energy is coupled through coupling loop B into the cavity and out through loop C to the crystal rectifier where it is rectified and indicated on the meter. At frequencies off resonance little or no current flows in the detector and the meter reading is small. Therefore, the micrometer and attached plunger are varied until a maximum meter reading is obtained. The micrometer setting is then compared with a calibration chart supplied with the wavemeter to determine the unknown frequency.

When the unknown signal is relatively weak, such as the signal from a klystron oscillator, the wavemeter is usually used as an absorption type of device. Connection is made to the instrument at input D. Rf loop C then acts as an injection loop to the cavity. When the cavity is tuned to the resonant frequency of the klystron, maximum energy is absorbed by the cavity, and the current indicated on the meter dips. When the cavity is not tuned to the frequency of the klystron, high current is indicated on the current meter. Therefore, the cavity is tuned for a minimum reading, or dip, in the meter; and the resonant frequency is determined from the micrometer setting and the calibration chart.

The potentiometer, R1, is used to adjust the sensitivity of the meter from the front panel of the instrument. J1 is a video jack and is provided for observing video waveforms with a test oscilloscope.

SUMMARY

The following is a brief summary of the important points of this chapter.

All **IMPEDANCE BRIDGES** have several things in common. Each type of bridge has a comparing circuit and a measuring circuit. They measure an unknown impedance by comparing the characteristics of the device under test with the characteristics of components within the test set.

POWER METERS that are designed to measure af power can be separated into two distinct groups. Power meters that are designed for measuring sine waves are basically electronic voltmeters calibrated in dB or dBm. VU METERS are designed to measure the average value of complex waveforms, such as a voice.

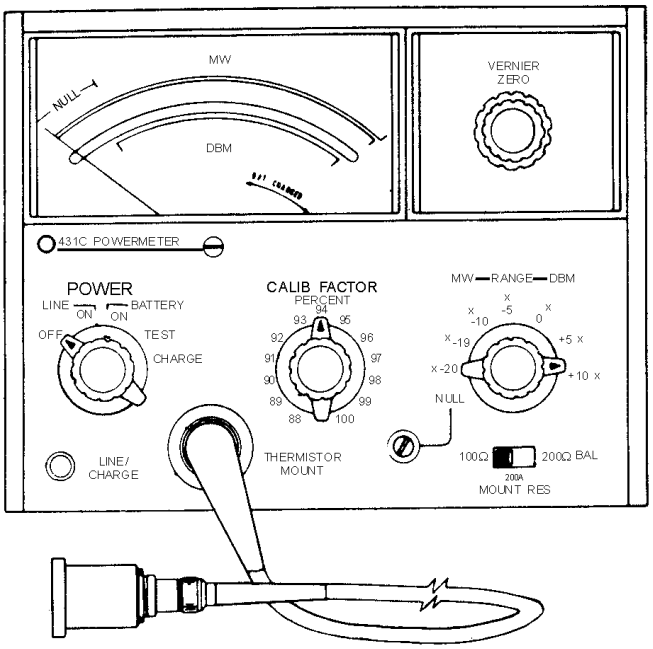

The most common type of test equipment used to measure rf power is the **ABSORPTION POWER** METER. Absorption power meters are designed to absorb all or part of the signal being measured. Examples of absorption power meters are output power meters, in-line wattmeters, and meters employing bolometers.

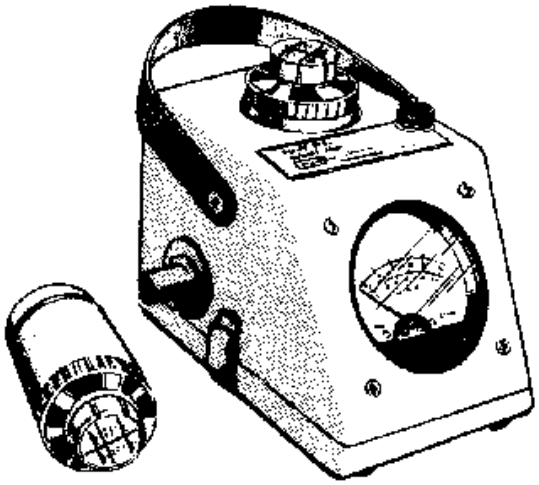

CALORIMETERS are the most accurate type of test equipment used for measuring high power. As power is applied to a calorimeter, its medium (either liquid or solid) is heated. The heat that is produced is directly proportional to the amount of applied power. The amount of applied power is determined by measuring the change in temperature of the medium.

Today's **ELECTRONIC FREQUENCY COUNTERS** are capable of measuring frequencies from dc to 40 GHz. Most have added features that enable period averaging, time-interval measurements, and scaling. Frequency counter accuracy can be extended by using an external frequency standard in lieu of its internal frequency standard.

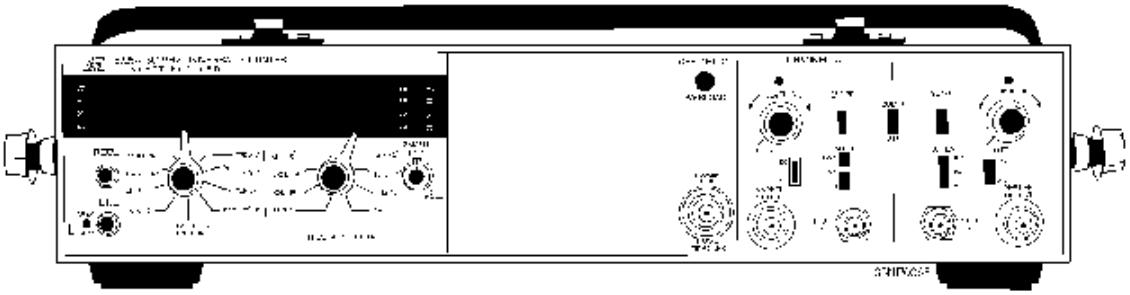

REFERENCES

Coaxial Frequency Meter*, NAVSHIPS 0969-092-3010, Naval Ships Systems Command, Washington, D.C., 1978.*

EIMB, Test Methods and Practices*, NAVSEA 08967-LP-000-0130, Naval Sea Systems Command, Washington, D.C., 1980.*

Fire Control Technician (M) 3 & 2*, NAVEDTRA 10209-A, Naval Education Training and Program Development Center, Pensacola, Fla., 1974.*

NEETS, Module 16, Introduction to Test Equipment*, NAVEDTRA 172-16-00-84, Naval Education and Training Professional Development and Technology Center, Pensacola, Fla., 1984.*

ANSWERS TO QUESTIONS Q1 THROUGH Q20.

A-1. A bridge circuit is balanced when the opposite legs of the comparing and measuring circuits exhibit the same voltage drop.

A-2. The capacitive and inductive characteristics of the test leads.

A-3. As the supply voltage increases, bridge components may heat up and become less accurate.

A-4. Small values of resistances.

A-5. A standard capacitor.

A-6. Both measure phase angle and magnitude in determining impedance.

A-7. High vswr, which equates to poor reception or a loss of power output.

A-8. DB, dBm, and vu.

A-9. 600-ohm load.

A-10. DB meters are used for measuring sine waves. Vu meters are used to measure the average value of complex waveforms.

A-11. Current transformers.

A-12. Electronic wattmeters are capable of measuring high-fequency signals.

A-13. Most in-line wattmeters are capable of measuring both forward and reflected power.

A-14. Temperature-sensitive material that exhibits a large negative temperature coefficient.

A-15. Temperature, mass, and time.

A-16. As power is applied, the medium heats up in proportion to the applied power.

A-17. The National Bureau of Standards.

A-18. They are used to monitor fixed motor speeds.

A-19. Monitor a submultiple frequency to prolong the flasher-tube life.

A-20. Power is absorbed by the frequency meter cavity; and a pronounced dip in power, at the output, will be observed.

CHAPTER 4

QUALITATIVE MEASUREMENTS

LEARNING OBJECTIVES

Upon completion of this chapter, you will be able to do the following:

1. Identify the various methods of measuring standing-wave ratios.
2. Identify the various methods of determining electrical losses caused by deterioration of transmission lines.
3. Identify the methods of measuring intermodulation distortion.

INTRODUCTION TO QUALITATIVE MEASUREMENTS

As a technician, you are responsible for repairing and maintaining complex electronic systems. The basic ability to repair a specific piece of equipment is only the first step in becoming a qualified technician. Your ultimate goal should be to become proficient at *systems* fault isolation — in other words, to know the entire system like the back of your hand. To reach this goal you will need to be familiar with all parts of the system and know how they are interconnected and interact with each other. There are numerous shortcuts or tricks of the trade that can only be learned through experience on any system, but the most practical thing for you to remember is to approach all problems in a logical manner.

Various combinations of electronic equipment are interconnected to form a system capable of performing specific functions. You must be able to apply general test methods and practices to installation, tuning, maintenance, and repair of the system. This requires you to have a thorough knowledge of many types of electronic equipment. When radar, communication, and digital computers are interconnected, they require different maintenance procedures than when they are operated separately. Revised test procedures may be necessary. Detrimental interactions between equipment or facilities must be corrected and effective preventive maintenance procedures must be planned for all equipment within the system. System quality figures, such as sensitivity and coverage, must be determined and measured during equipment preventive maintenance checks to assure efficient operation. System monitoring at specific test points is often used to help localize a problem.

System testing and monitoring are frequently accomplished by using an external piece of electronic equipment, which is designed specifically for testing a particular system. Some computers and computer systems build in their own monitoring and testing devices and will inform the operator when and where failure has occurred. You must realize that any equipment designed to test, monitor, or repair another system is itself subject to malfunction and will require periodic checks and preventive maintenance. This chapter will cover some of the basic test methods and practices associated with system-level troubleshooting.

STANDING-WAVE RATIO (SWR) MEASUREMENTS

Standing-wave ratio (swr) is the ratio of the maximum voltage or current to the minimum voltage or current at any point along a transmission line. Swr measurements are used to determine the matching quality of the termination of the line.

A variety of methods and test equipments may be used to measure the voltage or current distribution along a transmission line. An open transmission line is accessible for coupling to many types of voltage-measuring devices, such as a wavemeter or a grid-dip meter. However, at higher frequencies where coaxial cables or waveguides are used to minimize skin effect losses, (discussed in NEETS, module 10) access is more complicated. Access to the interior of the waveguide or center conductor of the coaxial cable must be gained by using a unidirectional or bidirectional coupler, which is inserted into the transmission line. The coupler contains a slot into which an rf probe is inserted and positioned with respect to directivity.

The conditions that produce standing waves and their adverse effects are discussed in detail in NEETS, module 10. The different methods of detecting and measuring standing waves are discussed in the following paragraphs.

PROBES

A magnetic or electric probe can be used to observe the standing wave on a short-circuited, terminated line. The wavelength is obtained by measuring the distance between alternate maximum or minimum current points along the line. A typical setup operating at 300 megahertz might use two 10-foot lengths of number 14 phosphor-bronze wires, which are spaced 1 inch apart and supported parallel to a set of probe guide rails. The line should be partially matched to the source generator by means of a parallel-wire shorting stub connected in parallel with the transmission line and the oscillator output line. Figure 4-1, view A and view B, illustrates the types of probes required for this method of measurement.

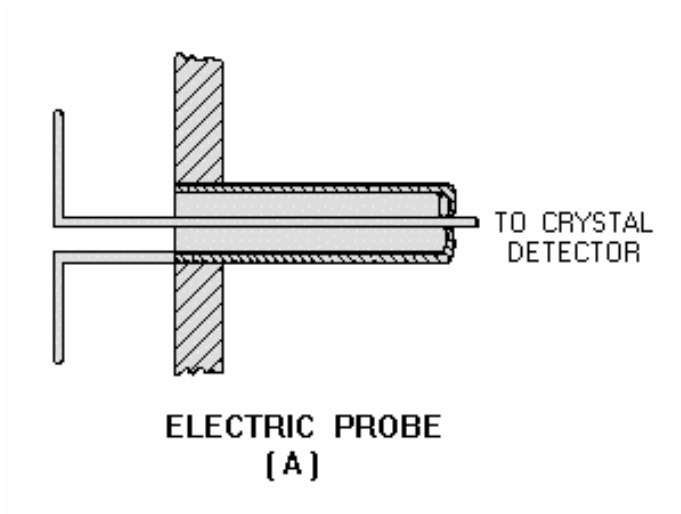

Figure 4-1A.—Typical electromagnetic probe.

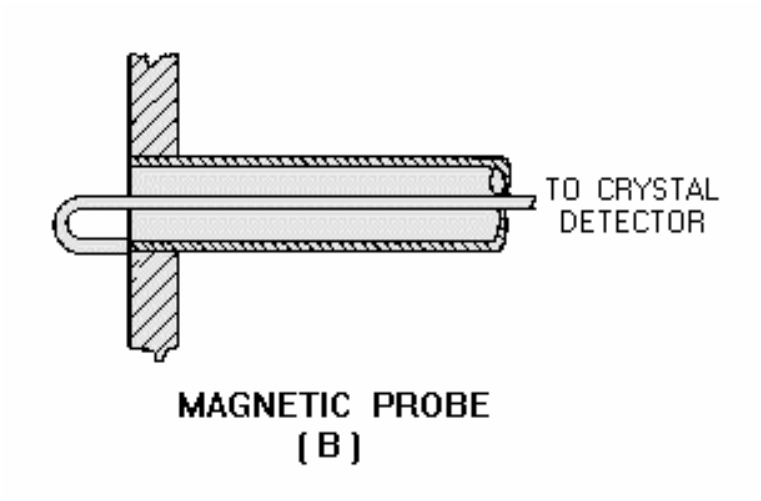

Figure 4-1B.—Typical electromagnetic probe.

NEON-LAMP AND MILLIAMMETER METHODS

In this method of measurement, a neon bulb or milliammeter is moved along the two-wire parallel transmission line. Points of maximum voltage (standing-wave voltage peaks) with the lamp or points of maximum current (standing-wave current peaks) with the indicator will have maximum brilliance or indication, respectively.

Q-1. At what points along a transmission line will a neon lamp glow the brightest?

BRIDGE METHODS

The bridge method permits measurement of the standing-wave ratio without actually measuring the standing waves. The bridge method is applicable because the input impedance of a line terminated in its characteristic impedance is a pure resistance equal to the characteristic impedance. A line terminated in this way can be used as the unknown resistance in a bridge circuit and a null can be obtained in the indicating device when the other resistance arms of the bridge are properly adjusted.

Many types of bridges can be used. For example, an ac bridge that is independent of the applied frequency can be used. The bridge will become unbalanced when the line is no longer properly terminated. Improper termination will produce a reactive component as well as a resistive component in the input impedance of the line and result in a standing wave. The reading of the indicating device depends on the degree of imbalance, which becomes more severe as the mismatch caused by the termination becomes worse. The indicating device can be calibrated directly to indicate the standing-wave ratio. The most common indicator consists of a crystal rectifier, a filtering circuit, and a sensitive dc meter movement in series with a high resistance.

RESISTANCE-CAPACITANCE BRIDGE

A resistance-capacitance bridge circuit is shown in view A of figure 4-2. The bridge is theoretically independent of the applied frequency.

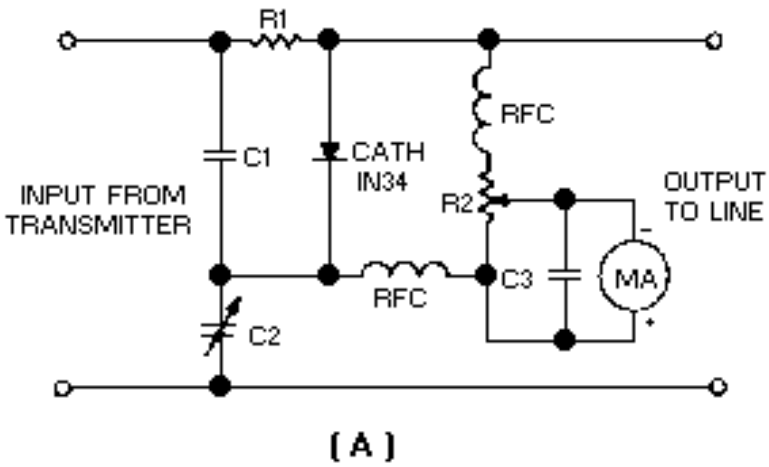

Figure 4-2A.—Resistance-capacitance bridge circuit for measuring standing-wave ratio.

However, the applied frequency must be low enough to avoid skin effect, stray inductance, capacitance, and coupling between circuit elements and wiring. The leads must be kept short to eliminate stray reactance, which causes bridge imbalance. The rectifier circuit wiring must be isolated from other bridge component fields so that induced voltages do not cause an erroneous indication. You should only use resistors having negligible capacitance and inductance effects.

Before you calibrate a newly constructed bridge, the following procedure must be followed if residual readings caused by stray effects are to be held to a minimum:

1. Connect a noninductive resistor (R_L in view B) that is equal to the characteristic impedance of the line to the output terminals of the bridge.

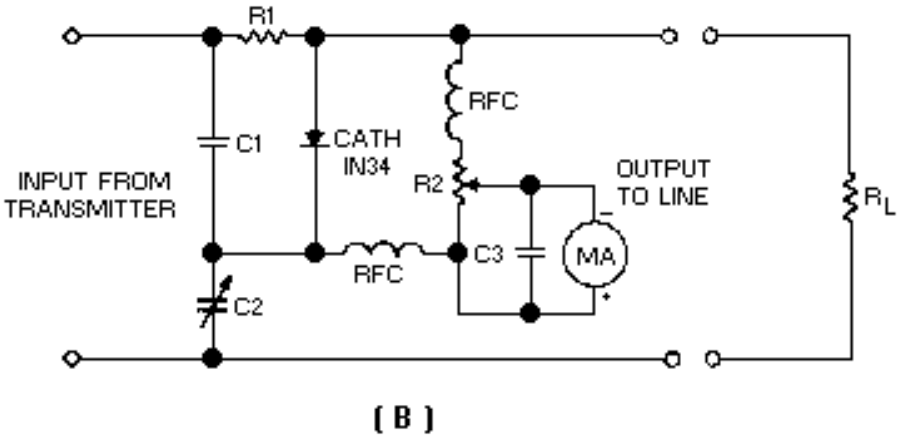

Figure 4-2B.—Resistance-capacitance bridge circuit for measuring standing-wave ratio.

2. Apply an rf voltage to the input terminals and adjust the variable capacitor for a minimum reading on the meter.

3. Reconnect the resistor (R_L) to the input terminals and connect the rf power source to the output terminals.

4. Adjust the rf voltage amplitude applied to the bridge until a full-scale meter reading is obtained.

5. Reconnect the bridge in the normal manner (resistor R_L to the output terminals, etc.). If the meter reading is now more than 1% or 2% of the full-scale reading, different arrangements (lead dress) of the internal wiring must be tried until the null is reduced to 0 or as close as possible to the 0 point.

The bridge can be calibrated after completion of the preceding check. Connect the transmission line under investigation to the output terminals of the bridge and connect a succession of noninductive resistors (R_O in view C) to the load end of the transmission line until the bridge is balanced. Assuming that the bridge was originally balanced for the characteristic impedance of the line, the standing-wave ratio can be computed from the following equation:

$$SWR = \frac{R_L}{R_0} \text{ or } \frac{R_0}{R_L}$$

Where:

R_0 = line impedance

R_L = load resistance

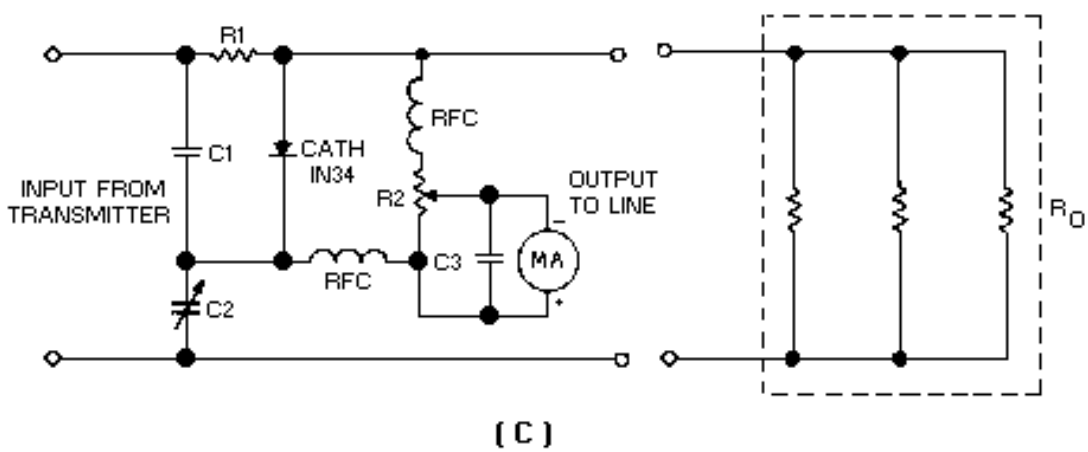

Figure 4-2C.—Resistance-capacitance bridge circuit for measuring standing-wave ratio.

Select the formula that yields a ratio greater than unity. The swr calibration can be recorded on the meter scale directly, recorded on a chart in terms of the meter deflection, or plotted on a graph against the meter deflection. The variable capacitor, in turn, can be calibrated for various characteristic impedances. This is accomplished by applying suitable resistors (R_O) across the output terminals and noting the capacitor settings at the respective balance points. A range of 50 to 300 ohms should prove attainable.

ACCURACY OF BRIDGE MEASUREMENTS

To assure accurate measurements, the rf signal applied to the bridge must be properly adjusted each time a calibrated instrument is used. Essentially, this adjustment is a repetition of the previously described reversed-bridge procedure. The following steps are to be performed:

1. Connect the line to the input terminals of the bridge and connect the transmitter to the output terminals.

2. Adjust the transmitter coupling until full-scale deflection is obtained. From this point on, the coupling must be left untouched.

3. Reconnect the bridge in the usual way and proceed with the measurement.

POWER OUTPUT VERSUS IMPEDANCE MATCHING

For maximum transfer of the power out of an rf source, with minimum heating from reflected power, the total output impedance sensed by the rf source must be equal to the internal impedance of that source. A perfect impedance match between transmitter and load would exist if the swr were 1 to 1. As discussed in NEETS, module 10, test equipment designed to measure the instantaneous voltage of a standing wave will give you a voltage standing-wave ratio (vswr). Test equipment designed to measure the instantaneous current component of a standing wave will give you the current standing-wave ratio (iswr). Regardless of the type of test equipment selected, both ratios will be the same.

Q-2. What vswr is a perfect match between a transmitter and its load?

SWR METERS

The Hewlett-Packard Model 415E swr meter, shown in figure 4-3, is a commonly used swr meter. It is extremely accurate, sensitive, lightweight, easy to use, and portable. It is essentially a high-gain, tuned audio amplifier with a square-law meter that is calibrated to read swr directly. The meter is designed to be operated at a mean center frequency of 1,000 hertz.

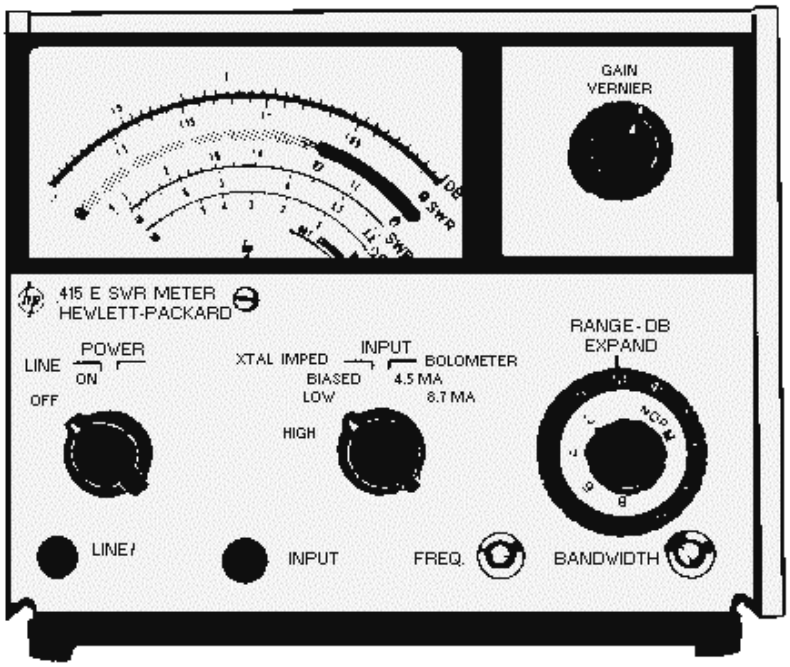

Figure 4-3.—Typical swr meter.

Figure 4-4 shows a typical swr measurement setup using the swr meter. The signal source is usually a sinusoidal wave that is square-wave modulated at 1,000 hertz.

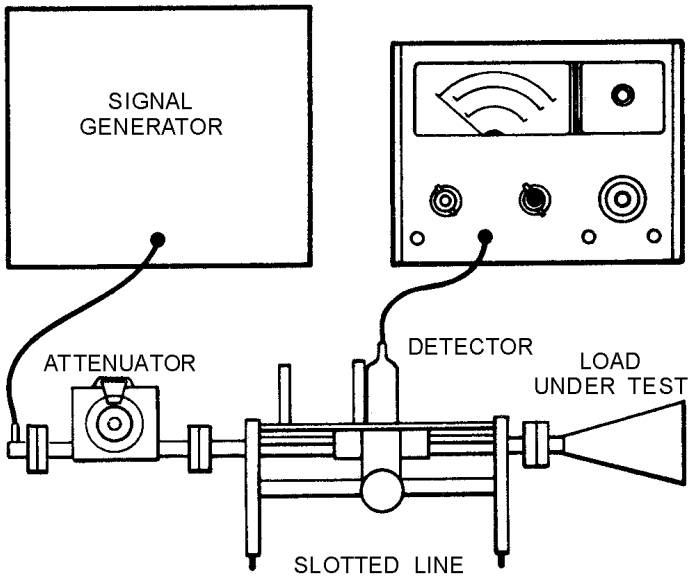

Figure 4-4.—Typical setup for measuring swr.

The swr meter usually gets its input from a detector, either a barretter or a crystal diode. This detector must be a square-law device (its output voltage is proportional to the applied rf power) to ensure

the accuracy of the meter. The input is amplified and applied directly to the meter. To perform the measurement as shown in figure 4-4, you move the detector along the slotted line so that its probe is at a voltage maximum and adjust the gain of the meter with the RANGE-DB, GAIN, and VERNIER controls (EXPAND switch to NORM) for full-scale deflection (1.0 on the 1.0 to 4 SWR scale). Then move the probe toward a minimum. If the meter drops below 3.2, rotate the RANGE-DB switch one position clockwise and read on the 3.2 to 10 SWR scale. If the pointer drops below this scale, rotate the RANGE-DB switch one more position clockwise and read on the 1.0 to 4 scale and multiply by 10. This pattern continues for still higher swr readings.

The dB scales can be used for a standing-wave-ratio measurement by setting the meter to full scale at a voltage maximum, then turning the RANGE-DB switch clockwise for an on-scale reading at a voltage minimum and noting the difference in dB reading at the maximum and minimum. A dB reading is obtained by adding the RANGE-DB switch setting and meter indication. The swr meter may also be used for high resolution insertion loss measurements.

The setup for performing insertion loss or attenuation measurements is shown in figure 4-5. It requires that you initially establish a convenient reference on the DB scale of the meter. This is accomplished by connecting the signal source directly to the detector and using the GAIN and VERNIER controls to adjust the meter pointer to a convenient reference. Then you can insert the device to be measured between the signal source and the detector and note the change in dB, as shown on the meter.

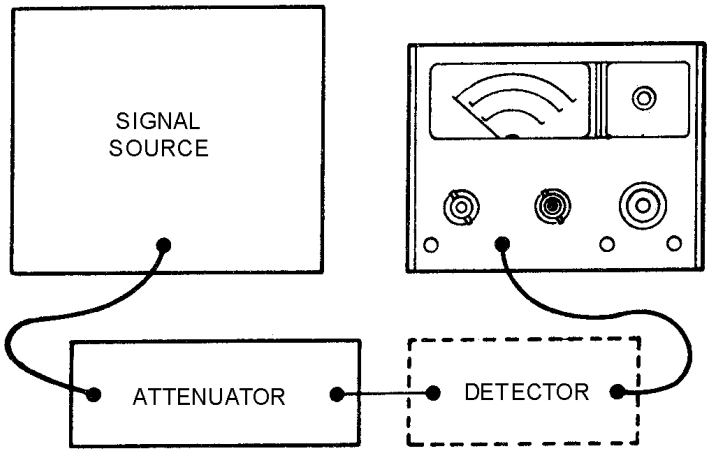

Figure 4-5.—Typical setup for measuring attenuation or insertion loss.

ATTENUATION AND INSERTION LOSS MEASUREMENTS OF TRANSMISSION LINES

Transmission lines are sometimes subjected to extremes of weather and the corrosive effects of salt water. You should be aware of the adverse effects of this environment on transmission lines and how to determine electrical losses caused by transmission-line deterioration.

Q-3. What are the two common causes of transmission-line deterioration?

LOSS MEASUREMENT

Insertion loss measurement of transmission lines requires the use of a good signal generator and an accurate power meter. The method is identical to the insertion loss measurements used on most couplers. When a known frequency, at a predetermined level of power, is inserted into one end of a transmission

line, then the same frequency and the same level of power should be transmitted to the other end of a transmission line. Because all transmission lines contain some degree of resistance, some loss of power will occur during the test.

Exposure to the elements over a period of time causes transmission-line deterioration. To determine the accuracy of this test, you should use the power meter to measure the output of the signal generator at the end of the test cable to be attached to the transmission line. Any power loss associated with the test cables should be recorded and subtracted from the measurement taken with the transmission line connected.

You should note that transmission lines, like all other electronic components, are designed to operate over a specific range of frequencies. It is not uncommon for a transmission line to operate improperly at one frequency, yet operate properly over the remainder of its frequency spectrum. You should check transmission-line losses over their entire frequency range. Insertion loss measurements are normally taken when a system is first installed or the transmission line is replaced. Periodic measurements should be performed to enable you to determine if system performance is being degraded by transmission-line deterioration.

Q-4. Is it possible for a transmission line to operate improperly at certain frequencies and properly at others?

TRANSMISSION-LINE FORMULAS

Transmission lines are engineered and manufactured to meet certain specifications. The most important of these specifications relates to frequency, power-handling capabilities, and characteristic impedance. The dielectric constant (K) of the insulating material is probably the manufacturer's most important consideration and is the primary factor that affects the size of the coaxial cable. The formulas in the following sections discuss some aspects of coaxial transmission-line engineering.

A cross section of a coaxial line is shown in figure 4-6. The characteristic impedance of a coaxial line can be determined by the following formula:

$$Z_O = \frac{138}{\sqrt{K}} (\log \frac{D}{d})$$

Where:

D = the inside diameter of the outer conductor

d = the outside diameter of the inner conductor and must be expressed in the same units as D

K = the dielectric constant of the insulating material (See table 4-1.)

Z_O = the characteristic impedance

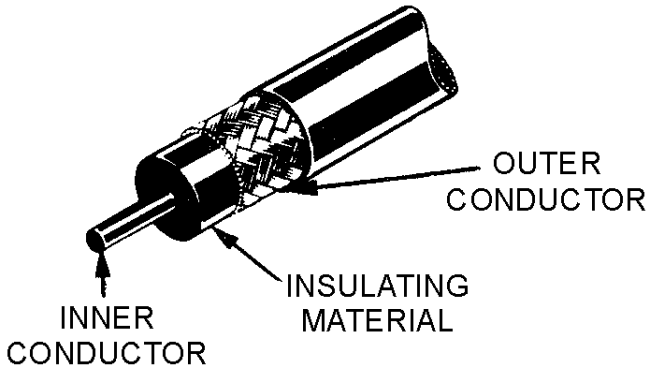

Figure 4-6.—Coaxial line.

Table 4-1.—Dielectric Constants of Materials

Material	Dielectric constant (Approx.)	Material	Dielectric constant (Approx.)
Air	1.0	Lucite	2.5
Amber	2.6-2.7	Mica (electrical)	4.0-9.0
Asbestos Fiber	3.1-4.8	Mica (clear India)	7.5
Bakelite (asbestos base)	5.0-22	Mica (filled phenolic)	4.2-5.2
Bakelite (mica filled)	4.5-4.8	Micaglass (titanium dioxide)	9.0-9.3
Barium Titanate	100-1250	Micarta	3.2-5.5
Beeswax	2.4-2.8	Mycalex	7.3-9.3
Cambric (varnished)	4.0	Neoprene	4.0-6.7
Carbon Tetrachloride	2.17	Nylon	3.4-22.4
Celluloid	4.0	Paper (dry)	1.5-3.0
Cellulose Acetate	2.9-4.5	Paper (coated)	2.5-4.0
Durite	4.7-5.1	Paraffin (solid)	2.0-3.0
Ebonite	2.7	Plexiglas	2.6-3.5
Epoxy Resin	3.4-3.7	Polycarbonate	2.9-3.2
Ethyl Alcohol (absolute)	6.5-25	Polyethylene	2.5
Fiber	5.0	Polyimide	3.4-3.5
Formica	3.6-6.0	Polystyrene	2.4-3.0
Glass (electrical)	3.8-14.5	Porcelain (dry process)	5.0-6.5
Glass (photographic)	7.5	Porcelain (wet process)	5.8-6.5
Glass (Pyrex)	4.6-5.0	Quartz	5.0
Glass (window)	7.6	Quartz (fused)	3.78
Gutta Percha	2.4-2.6	Rubber (hard)	2.0-4.0
Isolantite	6.1	Ruby Mica	5.4
Selenium (amorphous)	6.0	Styrofoam	1.03
Shellac (natural)	2.9-3.9	Teflon	2.1
Silicone (glass) (molding)	3.2-4.7	Titanium Dioxide	100
Silicone (glass) (laminate)	3.7-4.3	Vaseline	2.16
Slate	7.0	Vinylite	2.7-7.5
Soil (dry)	2.4-2.9	Water (distilled)	34-78
Steatite (ceramic)	5.2-6.3	Waxes, mineral	2.2-2.3
Stearite (low loss)	4.4	Wood (dry)	1.4-2.9

Attenuation in a coaxial line in terms of decibels per foot can be determined by the following formula:

$$a = \frac{4.6\sqrt{f}\,(D + d)}{D \times d\,(\log\frac{D}{d})}$$

Where:

D = the inside diameter of the outer conductor (in inches)

d = the outside diameter of the inner conductor (in inches)

f = the frequency (in megahertz)

a = the attenuation (in decibels per foot of line)

As a technician, you need not be concerned with designing coaxial transmission lines. It is, however, our feeling that you should be familiar with the parameters that go into making a transmission line. It can readily be seen by the above formulas that transmission lines cannot be randomly selected without consideration of system requirements. NAVSHIPS 0967-000-0140, EIMB, *Reference Data*, section 3, lists the characteristics of most common transmission lines.

Q-5. What factor has the greatest effect on the physical size of a coaxial cable?

Q-6. Is the attenuation of a coaxial cable independent of frequency?

INTERMODULATION DISTORTION MEASUREMENTS

Intermodulation distortion occurs when two or more frequencies become mixed across a nonlinear device. The resultants are the difference frequency and the sum frequency, both components of the originals. Undesirable frequencies can be generated by a mixing of two discrete frequencies. Spurious radiation, arising from close spacing of transmitter and receiver, is a prime source of an undesirable frequency that can cause intermodulation distortion in an electronic circuit. This is particularly the case when antenna couplers are employed. Cross modulation and parasitic generation (described in the next section) are two other sources of undesirable frequencies that may cause intermodulation distortion.

Q-7. What is the main cause of intermodulation distortion?

CROSS MODULATION AND PARASITIC GENERATION

CROSS MODULATION occurs when a signal from an adjacent channel crosses over into a second channel and modulates the frequency of the second channel. PARASITIC GENERATION occurs when regenerative feedback is sufficient to cause a circuit to oscillate, even though it is not designed to oscillate. Both types of distortion are common to systems that are misaligned.

INTERMODULATION DISTORTION DETECTION

The presence of intermodulation distortion is determined by a two-tone test method. Two sinusoidal frequencies of equal amplitude are introduced into the system under test. The two frequencies are spaced

close together with reference to the unit under test. The output of the system under test (an amplifier, receiver, or transmitter) is monitored on a spectrum analyzer that is comparable in characteristics to the suspect system. The resultant display should be an exact reproduction of the input frequencies. If not, some form of intermodulation distortion is present. To determine if external sources are causing the intermodulation distortion, you can use a single-frequency signal. If the display on the spectrum analyzer does not show the single frequency, then intermodulation distortion is present.

Intermodulation distortion cannot be entirely suppressed, but it can be minimized by shielding components and circuitry, parasitic suppression circuitry, and antenna spacing. These factors are incorporated in the design of the system and are tested during production. Any shields or parasitic suppressors that are removed by the technician must be replaced before troubleshooting and/or repair can be effective. Antenna locations also pose a consideration when installing a new system. Ship alteration specifications must be observed when new antenna systems are being installed.

Q-8. When you are testing a piece of equipment for intermodulation distortion, what should the output of the equipment look like?

SUMMARY

The important points of this chapter are summarized in the following paragraphs:

STANDING WAVES are the result of an impedance mismatch between a transmission line and its load. If a transmission line is not properly terminated, it will cause a percentage of the transmitter power to be reflected back to the source. The reflected wave or standing wave will increase in magnitude as the mismatch becomes greater.

VSWR refers to the voltage ratio of the incident wave (that which is transmitted to the load) and the reflected wave (that which is reflected by the load back to the transmitter). An ideal vswr is considered to be 1 to 1.

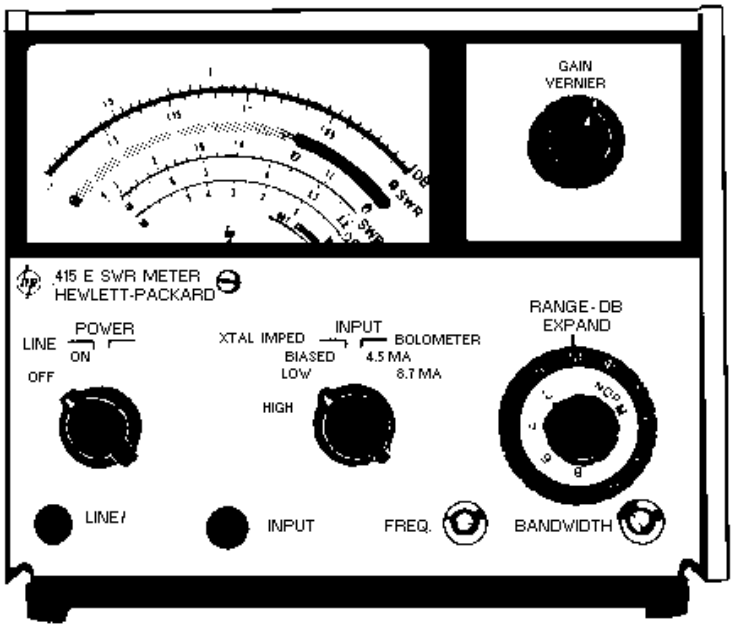

Standing waves that are present on a transmission line can be used to determine the **TRANSMITTER FREQUENCY**. Voltage or current peaks are present at half-wavelength intervals. By measuring the distance between peaks, you can compute frequency mathematically.

TWO-WIRE, PARALLEL TRANSMISSION LINES are usually tested for standing waves with test devices that are inductively coupled to the line. These test devices vary greatly in their complexity, ranging from bridge circuits to simple neon lamps.

INSERTION LOSS MEASUREMENTS are performed by injecting a signal of a known amplitude into a transmission line and then monitoring the signal at the far end of the cable with a power meter. Loss measurements must be taken at various frequencies to determine if the transmission line is good across its frequency range.

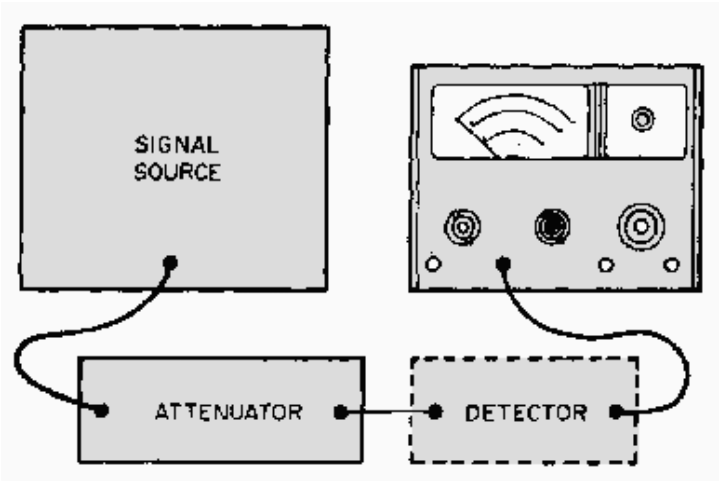

The most common cause of **INTERMODULATION DISTORTION** is improper spacing of transmitters and receivers. CROSS MODULATION is common to equipment that is misaligned. Intermodulation distortion can be tested by injecting two signals (different frequencies) into a piece of equipment and then monitoring its output for distortion using a spectrum analyzer. Intermodulation distortion is usually caused by improper antenna spacing or by poorly shielded components or circuits.

REFERENCES

EIMB, *Test Methods and Practices Handbook*, NAVSEA 0967-LP-000-0130, Naval Sea Systems Command, Washington, D.C., 1980.

NEETS, Module 10, *Wave Propagation*, Transmission Lines, and Antennas, NAVEDTRA 172-10-00-83, Naval Education Training and Program Development Center, Pensacola, Fla., 1983.

SWR Meter 415E, NAVSHIPS 0969-139-2010, Hewlett-Packard Co., Palo Alto, Calif. 1968.

ANSWERS TO QUESTIONS Q1. THROUGH Q8.

A-1. *At standing-wave voltage peaks.*

A-2. *1 to 1.*

A-3. *Corrosive effects of salt water and weather extremes.*

A-4. *Yes, it is quite common.*

A-5. *The dielectric constant of the insulating material.*

A-6. *No.*

A-7. *Close spacing of transmitters and receivers.*

A-8. *An exact reproduction of the input.*

CHAPTER 5

INTRODUCTION TO WAVEFORM INTERPRETATION

LEARNING OBJECTIVES

Upon completion of this chapter, you will be able to do the following:

1. Explain the use of waveform interpretation in testing applications.
2. Identify the different types of modulation and methods of measuring modulation.
3. Explain the various uses of spectrum analyzers.
4. Explain the various uses of time-domain reflectometers.
5. Identify the various tests that can be performed with the swept-frequency technique.

INTRODUCTION TO WAVEFORM INTERPRETATION

Measurements performed with oscilloscopes, time-domain reflectometers, and spectrum analyzers enable you to view the signal produced by the equipment or circuit under test. However, a visual display is of no value unless you are able to interpret the signal characteristics.

A displayed waveform is a representation of a varying signal related to time. You can graphically plot an unknown waveform by using a system of coordinates in which the amplitude of the unknown signal is plotted linearly against time. An analysis of the resultant waveform provides you with valuable information in determining the characteristics of many electronic (and some mechanical) devices. For example, the waveform of a signal may indicate the presence of harmonics or parasitic oscillations, or it may indicate how closely a device is following a desired cycle of operation. As the parts in an amplifier begin to shift in value or deteriorate, waveform distortion often occurs and indicates abnormal operation of a circuit and often precedes circuit breakdown. Malfunctioning of electrical or electronic circuits within equipment can usually be traced, by waveform inspection, to a specific part or parts of the circuit responsible for the distorted signal. On the basis of these facts, it is apparent that there is an important need for test equipment that can provide a visual presentation of a waveform at the instant of its occurrence in a circuit.

DISTORTION is a term used by technicians and engineers alike that generally signifies dissatisfaction with the shape of the wave processed by an amplifier. Distortion of a waveform is the undesired change or deviation in the shape of the observed signal with respect to a reference waveform. Classifying any waveform as a *distorted* wave without reference to the electronic circuitry involved is meaningless. A waveform that can be validly termed distorted with respect to a specific amplifier circuit may be the normal waveform to be expected from another amplifier circuit. One of the most important steps in waveform analysis, the one that usually proves the most difficult for the maintenance personnel, is the interpretation of patterns viewed on the test equipment.

This chapter will cover some of the basic test methods and practices associated with waveform interpretation.

MODULATION MEASUREMENTS

Modulation measurements are sometimes required during tuning procedures to adjust transmitting equipment for the proper amount of modulation. During maintenance tests of modulated transmitter equipment, you should determine the amount of distortion in the output signal and the modulation level or index. The modulation level in multiplexing equipment is usually set at the factory or during corrective maintenance procedures. Proper adjustment of the input signal level and automatic signal-level regulation circuits provides the correct amount of modulation. Defects in modulation circuits of a transmitter can be detected by measurements of the quality of the received signals at the receiver. Corrective maintenance analysis of multiplex equipment modulation circuits can usually be made by signal-level measurements.

Some radio transmitters, when operating in the AM mode, must be adjusted for correct modulation during normal tuning procedures. If the modulation level is low, the transmitter is not operating at its maximum efficiency. On the other hand, modulation in excess of 100% produces serious distortion. Since neither of these conditions is desirable, amplitude modulation should be maintained between 60% and 95% when possible. The modulation level or index of AM and fm radio transmitters that operate in the vhf range is initially adjusted by the manufacturer or during corrective maintenance. The amplifier gain of the modulator can be initially adjusted by reference to the modulation meter provided on the front panel of the equipment.

Pulse modulation of radar and radio beacon signals can be measured by waveform displays presented on a standard oscilloscope. The amount of usable energy in a pulsed waveform, as measured by a spectrum analyzer, is also an indication of the pulse modulation quality.

Attaining 100% amplitude modulation of an rf carrier with a sine wave requires a modulating power equal to one-half of the rf carrier power. Under this condition, the average power of the modulated carrier is equal to 1.5 times the average unmodulated carrier power. The added power is divided equally between the upper and lower sidebands. During the peaks of 100% modulation, the amplitude of the carrier is doubled. This will cause the instantaneous peak power to be four times the instantaneous unmodulated peak power $P = E^2/R$. When voice modulation is employed, only the highest amplitude peaks can be allowed to modulate the carrier 100%. Since many speech components do not modulate the carrier 100%, the average power required for voice modulation is less than that required for modulation with a sine wave. Voice peaks usually modulate a carrier 100% when the modulation increases the average carrier output power 25% over its normal value.

Q-1. What is the result of overmodulating an AM signal?

Q-2. For AM transmissions, the carrier is normally modulated within what range?

AMPLITUDE-MODULATION MEASUREMENTS

An increase in the power output of an AM transmitter is indicated by an increase in antenna current. The increase can be taken as a measure of the degree of modulation and can be expressed as a percentage, as shown in figure 5-1. The graph for this figure was developed from the relationship existing between the carrier power and the increased power resulting from the added modulation power. The formula for calculating the PERCENTAGE of MODULATION is as follows:

$$\text{Percentage of modulation} = \frac{100\ (E_{max} - E_o}{E_o}$$

Where:

E_{max} = the highest peak voltage

E_o = the unmodulated carrier voltage

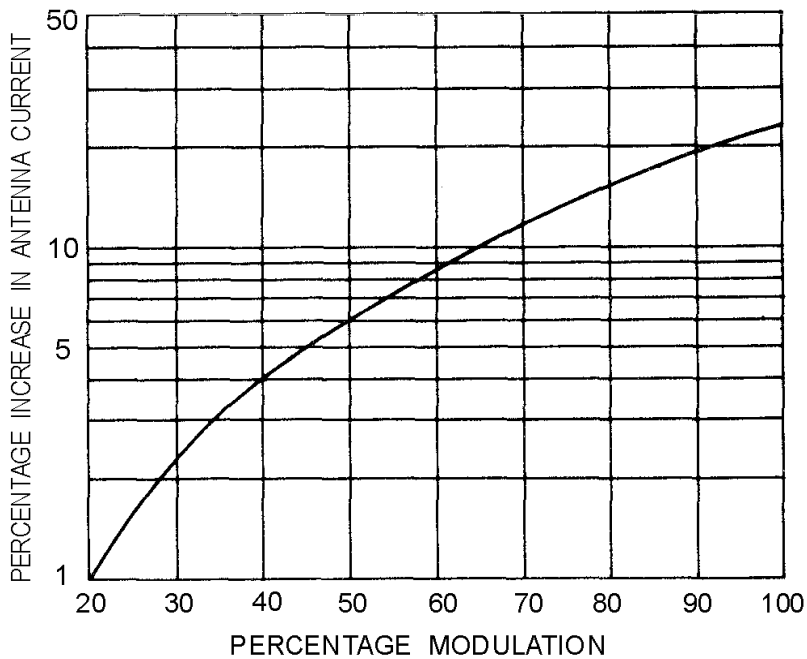

Figure 5-1.—Antenna current increase with amplitude modulation.

The use of this formula is based on the assumption that the modulating voltage is a pure sine wave. Normal broadcasting, however, is characterized by complex envelope patterns, as illustrated in figure 5-2. In this light, the previous formula is not so clear. Consequently, the preceding formula should be viewed more correctly as the PERCENTAGE OF POSITIVE PEAK MODULATION. When the minimum voltage (E_{min}) rather than the peak voltage (E_{max}) is used to compute percentage of modulation, the computed percentage (shown below) is the PERCENTAGE OF NEGATIVE PEAK MODULATION:

$$\text{negative peak percentage of modulation} = \frac{100(E_0 - E_{min})}{E_o}$$

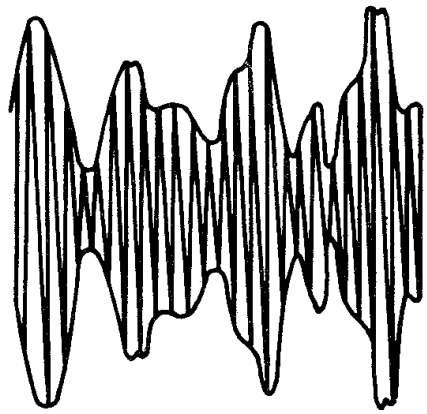

Figure 5-2.—Rf carrier amplitude-modulated by a complex wave envelope.

Since the preceding two modulation percentages often differ, you should define the AVERAGE PERCENTAGE OF MODULATION, as shown below (refer to fig. 5-3):

$$\text{average percentage of modulation} = \frac{100\ E_{max} - E_{min}}{2 \times E_o}$$

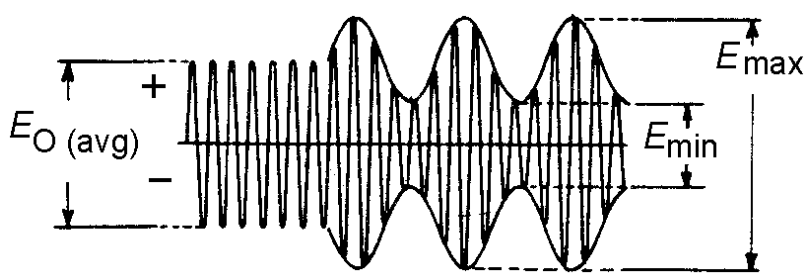

Figure 5-3.—Rf amplitude percentage modulation wave envelope.

From the preceding definitions of percentage of modulation, you should note that methods of *measuring* all three types of modulation percentages must be devised. When differing values are obtained, however, the cause may not necessarily be directly related to unequal positive and negative peaks of a complex modulation wave. Another possibility is distortion caused by carrier shift. Distortion may also be produced by effects other than the modulation process — for example, parasitic oscillation, nonlinear radio-frequency amplification of modulated signals, and distortion present in the audio amplifiers.

Unfortunately, continuous variations in the percentage of modulation create a number of additional problems. For example, damping is necessary so that a meter can provide an average reading despite fluctuations. An average reading, on the other hand, will not disclose the presence of transient overmodulation. This shortcoming is serious because of the large number of sideband frequencies produced in addition to the normal ones whenever overmodulation occurs. Not only do these extra frequencies interfere drastically with other transmissions, but they also may significantly distort the modulation signal. These considerations account for the importance of using a meter that responds to

modulation peak; specifically, both positive-peak and negative-peak overmodulation must be indicated. Positive-peak overmodulation occurs when the *positive* modulation exceeds 100%; negative-peak overmodulation occurs when the *negative* modulation exceeds 100%.

Oscilloscope Measurement Methods

The oscilloscope is widely used as an amplitude-modulation monitor and measuring instrument. Since it is capable of presenting visual indications of the modulated output of AM transmitters, the oscilloscope is reliable for detecting overmodulation and determining the percentage of modulation. For example, the relative error of most measurements taken with a 5-inch crt is about 10%. Although such accuracy is adequate for many maintenance checks, the oscilloscope is usually considered more valuable as a monitor of general modulation conditions. It is also used to monitor the amplitude-modulated output of a radio transmitter when photographic records are desired.

Types of Modulation Display

Two types of modulation patterns are provided by the oscilloscope, depending upon the hookup used. These patterns are the WAVE-ENVELOPE PATTERNS, as shown in figures 5-2 and 5-3, and the TRAPEZOIDAL PATTERN, as shown in figure 5-4.

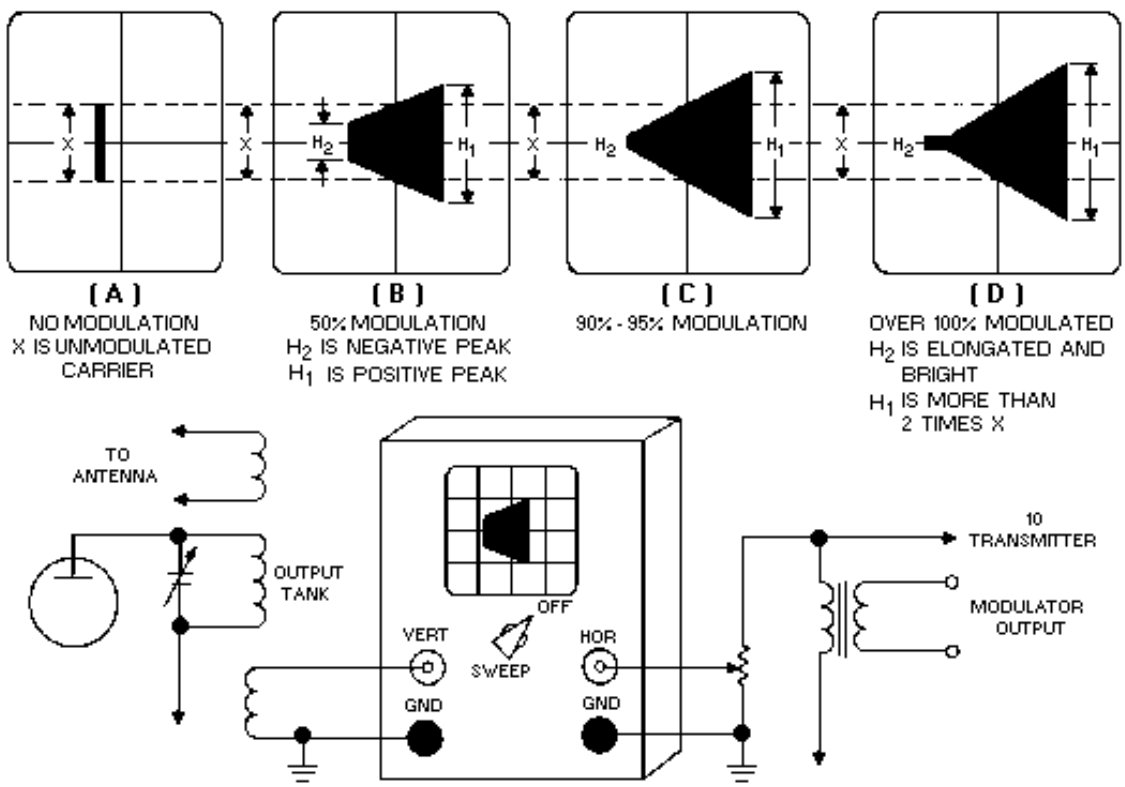

Figure 5-4.—Trapezoidal modulation patterns.

Figure 5-2 shows an oscilloscope presentation of an rf carrier that is amplitude-modulated by a complex wave, such as that of speech. Figures 5-4 and 5-5 show the effects of over 100% modulation on the carrier wave. The carrier wave envelope pattern (as shown in fig. 5-3) is obtained by applying the rf-

modulated wave to the vertical input of the oscilloscope. The trapezoidal pattern is obtained in a similar manner except that the modulation signal from the transmitter is used to horizontally sweep the oscilloscope (instead of having the sweep signal generated internally by the oscilloscope). Both methods are limited by the frequency response of the oscilloscope; therefore, these methods find greater applicability in the lf to hf ranges.

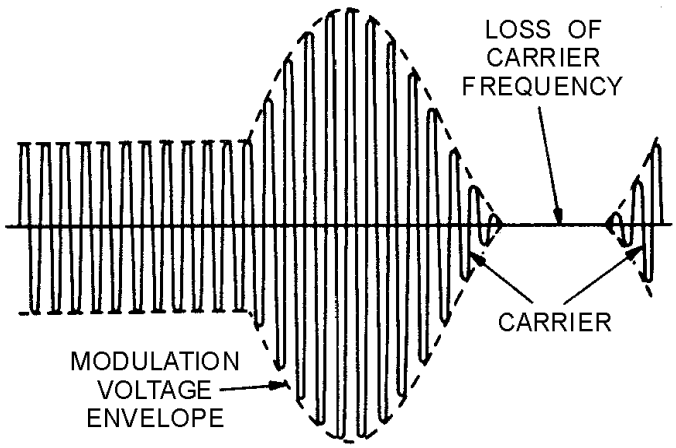

Figure 5-5.—Overmodulated rf carrier.

VHF AND UHF MEASUREMENTS

In the vhf and uhf ranges, modulation is normally measured by applying a specific-level, 1-kilohertz tone to the input of the modulator. This, in turn, produces a significant drop in the plate voltage of the final output stage of the modulator. The correct setting of output plate voltage ensures that overmodulation will not occur.

SINGLE-SIDEBAND MEASUREMENTS

Single-sideband modulation is a form of amplitude modulation in which only one sideband is transmitted with a suppressed carrier. Since balanced modulators are used to provide carrier cancellation, the exact balancing of the carriers to provide cancellation requires a null adjustment. The null can be observed and adjusted by using either a detector and an indicator, such as a voltmeter, or an oscilloscope for observation of the output while tuning the transmitter.

Measurements peculiar to sideband technology also include special modulation-amplitude and modulation-distortion checks. If the sideband modulator is overdriven or mistuned or the associated linear amplifiers are improperly loaded or overdriven, spurious output frequencies are produced. These are harmonically related to the driving signals and can cause splatter over a large range of frequencies, thus causing interference to other transmitting stations.

To determine the proper amplitude so that the modulation will not cause distortion or splatter, you use the audio two-tone modulation test. The resulting signals are shown in views A, B, and C of figure 5-6. The two-tone test is used for initial adjustment and for precise checking because it will indicate distortion. The two-tone test corresponds to the wave envelope method of AM modulation checking. Two signals of equal amplitude but of slightly different frequencies beating together are applied to the sideband modulator input to produce a single tone of approximately 1,000 hertz. On an oscilloscope, the

output appears as a series of fully modulated sine waves and is similar to a 100-percent-amplitude-modulated waveform, as shown in view A. A spectrum analyzer presentation is shown in view B.

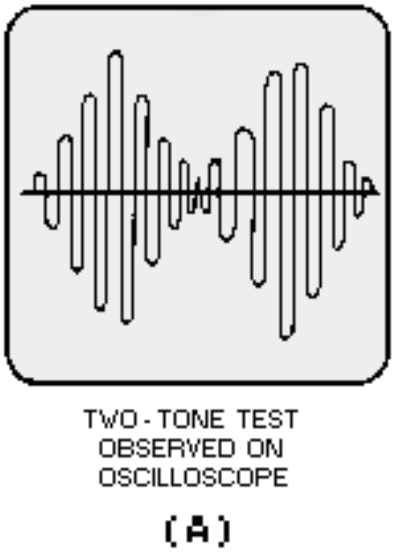

Figure 5-6A.—Examples of ideal two-tone test waveforms.

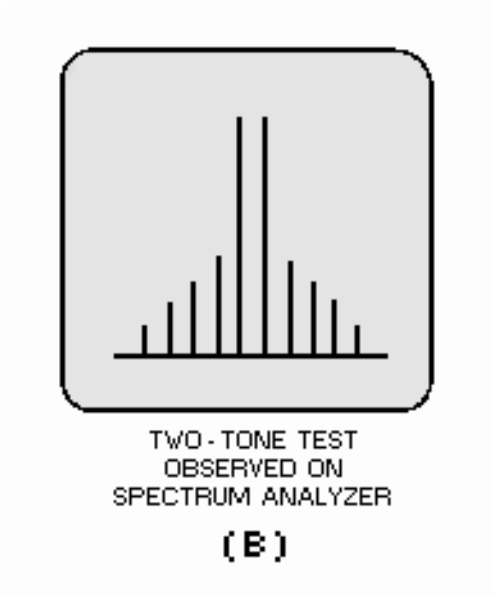

Figure 5-6B.—Examples of ideal two-tone test waveforms.

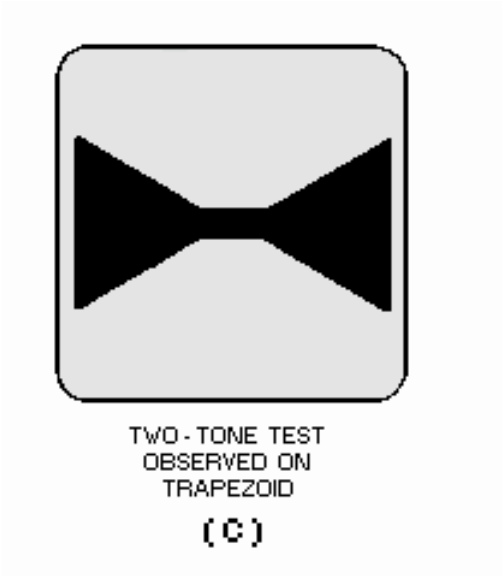

Figure 5-6C.—Examples of ideal two-tone test waveforms.

When the trapezoidal method is used, two opposed triangles appear on the oscilloscope, as shown in figure 5-6, view C. When equally balanced modulators are used, the triangles are mirror images. Elliptical or straight-line patterns appear when the phase-distortion check is used.

It is also possible to make a rough operating adjustment by varying the audio drive from the microphone so that on peak swings a definite value of final plate current is not exceeded. This check depends upon the initial accuracy of calibration and response characteristics of the ammeter in the final stage, as well as other factors.

FREQUENCY MODULATION

In frequency modulation, the carrier amplitude remains constant, and the output frequency of the transmitter is varied about the carrier (or mean) frequency at a rate corresponding to the audio frequencies. The extent to which the frequency changes in one direction from the unmodulated (carrier) frequency is called the FREQUENCY DEVIATION.

Deviation in frequency is usually expressed in kilohertz. It is equal to the difference between the carrier frequency and either the highest or lowest frequency reached by the carrier in its excursions with modulation. There is no modulation percentage in the usual sense. With suitable circuit design, the frequency deviation may be made as large as desired without encountering any adverse effects that are equivalent to the overmodulation in amplitude-modulation transmissions. However, the maximum permissible frequency deviation is determined by the width of the band assigned for station operation.

In frequency modulation, the equivalent of 100% modulation occurs when the frequency deviation is equal to a predetermined maximum value. There are several methods of measuring the modulation in frequency-modulated transmissions.

The frequency-deviation measurement of a frequency-modulated signal is normally performed with either a spectrum analyzer or with a modulation analyzer. The modulation analyzer method is more commonly used because of its accuracy. Typical accuracies for a modulation analyzer are within ±1%. Figure 5-7 shows a typical modulation analyzer.

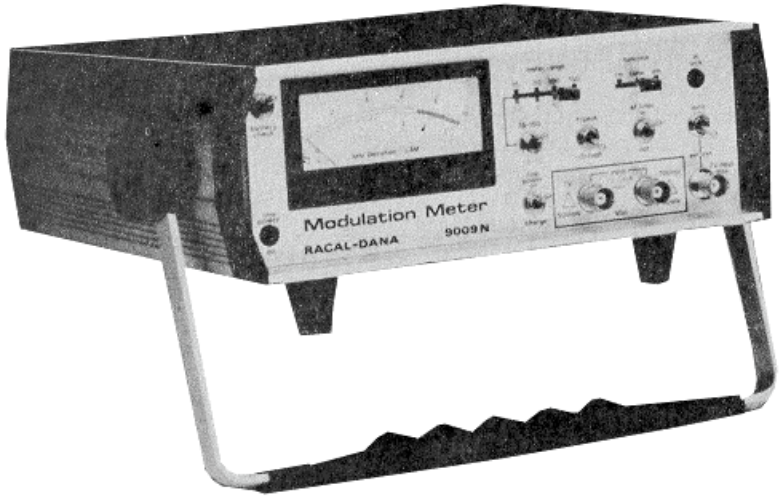

Figure 5-7.—Typical modulation analyzer.

Q-3. What is meant by frequency deviation?

SPECTRUM WAVEFORM ANALYSIS AND MEASUREMENTS

An analysis of a complex waveform, prepared in terms of a graphic plot of the amplitude versus frequency, is known as SPECTRUM ANALYSIS. Spectrum analysis recognizes the fact that waveforms are composed of the summation of a group of sinusoidal waves, each of an exact frequency and all existing together simultaneously.

Three axes of degree (amplitude, time, and frequency) are important when considering varying frequency. The time-domain (amplitude versus time) plot is used to consider phase relationships and basic timing of the signal and is normally observed with an oscilloscope. The frequency-domain (amplitude versus frequency) plot is used to observe frequency response - the spectrum analyzer is used for this purpose. Figure 5-8 illustrates the differences between frequency- and time-domain plots. View A illustrates a three-dimensional coordinate of a fundamental frequency (f_1) and its second harmonic ($2f_1$) with respect to time, frequency, and amplitude. View B shows the time-domain display as it would be seen on an oscilloscope. The solid line, $f_1 + 2f_1$ is the actual display. The dashed lines, f and $2f_1$ are drawn to illustrate the fundamental and second harmonic frequency relationship used to formulate the composite signal $f_1 + 2f_1$. View C is the frequency-domain display as it would be seen on a spectrum analyzer. Note in view C that the components of the composite signal are clearly seen.

Q-4. A spectrum analyzer is designed to display what signal characteristic?

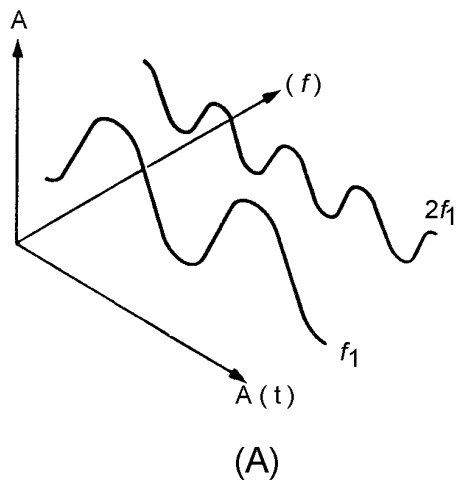

Figure 5-8A.—Time versus frequencies.

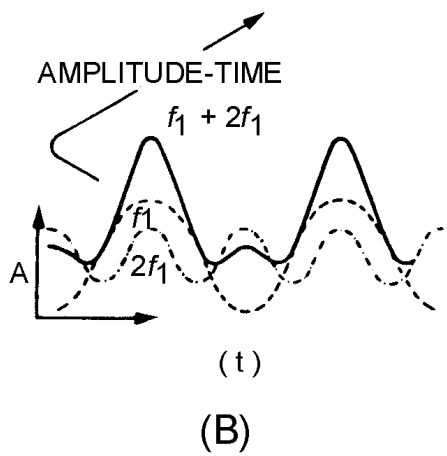

Figure 5-8B.—Time versus frequencies.

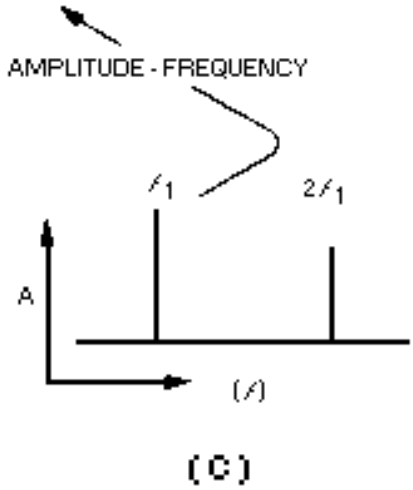

Figure 5-8C.—Time versus frequencies.

FREQUENCY-DOMAIN DISPLAY CAPABILITIES

The frequency domain contains information not found in the time domain. The spectrum analyzer can display signals composed of more than one frequency (complex signals). It can also discriminate between the components of the signal and measure the power level at each one. It is more sensitive to low-level distortion than an oscilloscope. Its sensitivity and wide, dynamic range are also useful for measuring low-level modulation, as illustrated in views A and B of figure 5-9. The spectrum analyzer is useful in the measurement of long- and short-term stability such as noise sidebands of an oscillator, residual fm of a signal generator, or frequency drift of a device during warm-up, as shown in views A, B, and C of figure 5-10.

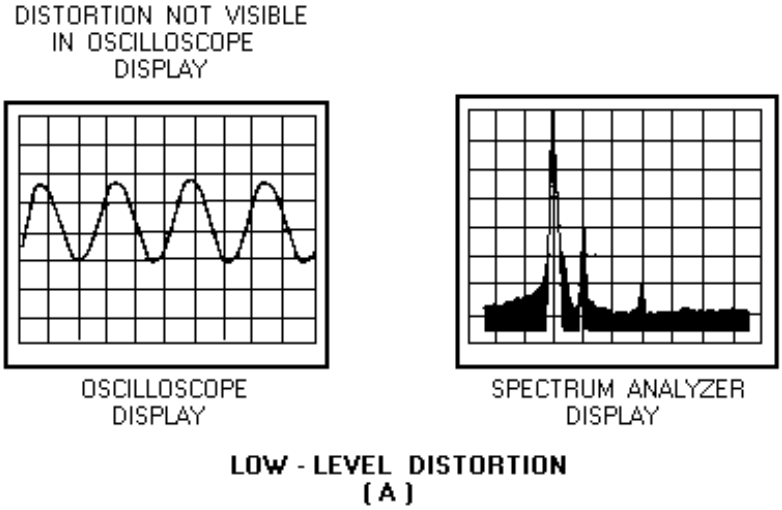

Figure 5-9A.—Examples of time-domain (left) and frequency-domain (right) low-level signals.

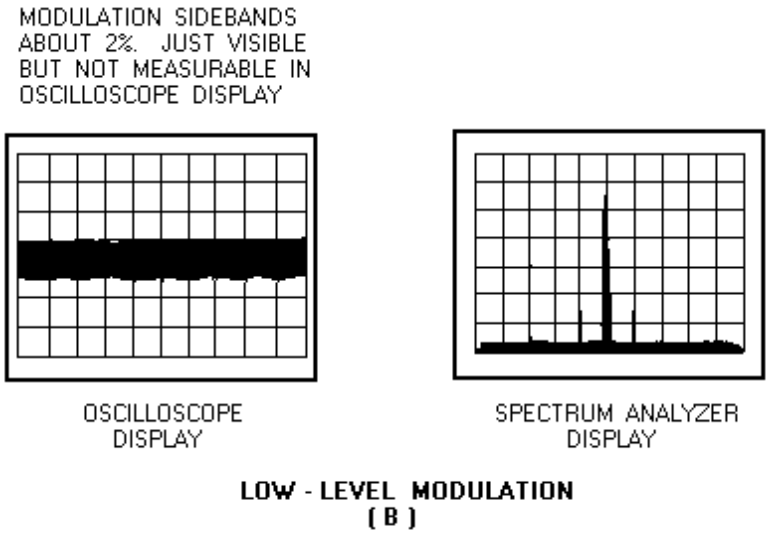

Figure 5-9B.—Examples of time-domain (left) and frequency-domain (right) low-level signals.

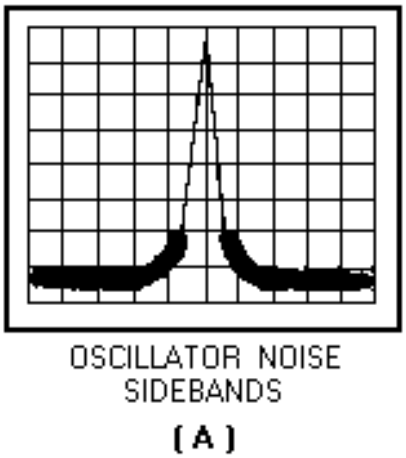

Figure 5-10A.—Spectrum analyzer stability measurements.

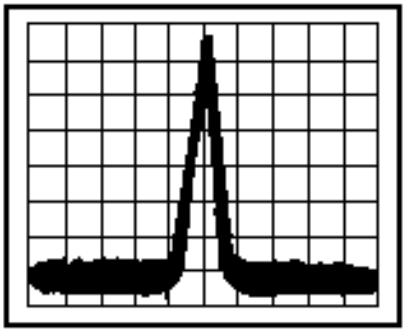

SIGNAL GENERATOR
RESIDUAL FM
(B)

Figure 5-10B.—Spectrum analyzer stability measurements.

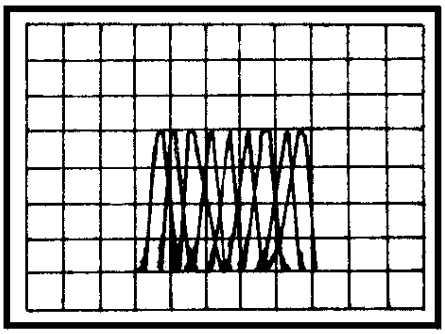

FREQUENCY
DRIFT
(C)

Figure 5-10C.—Spectrum analyzer stability measurements.

The swept-frequency response of a filter or amplifier and the swept-distortion measurement of a tuned oscillator are also measurable with the aid of a spectrum analyzer. However, in the course of these measurements, a variable persistence display or an X-Y recorder should be used to simplify readability. Examples of tuned-oscillator harmonics and filter response are illustrated in figure 5-11. Frequency-conversion devices such as mixers and harmonic generators are easily characterized by such parameters as conversion loss, isolation, and distortion. These parameters can be displayed, as shown in figure 5-12, with the aid of a spectrum analyzer.

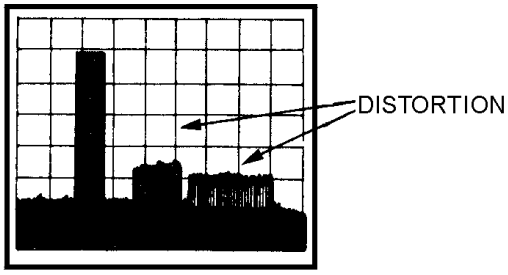

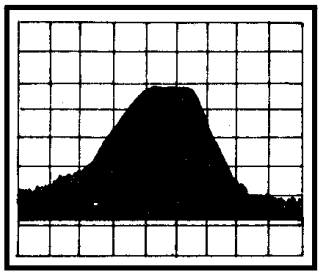

Figure 5-11.—Swept-distortion and response characteristics.

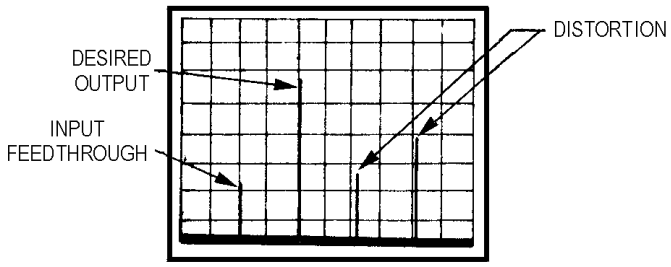

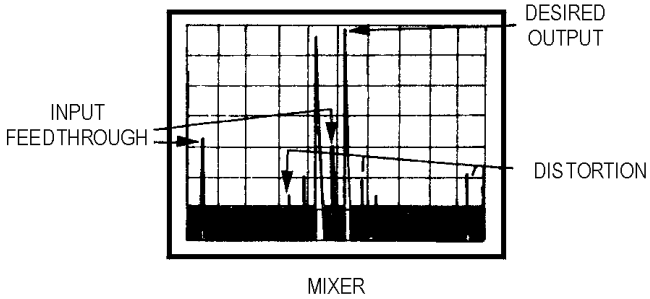

Figure 5-12.—Frequency-conversion characteristics.

Present-day spectrum analyzers can measure segments of the frequency spectra from 0 hertz to as high as 300 gigahertz when used with waveguide mixers.

SPECTRUM ANALYZER APPLICATIONS

Figure 5-13 shows a typical spectrum analyzer. The previously mentioned measurement capabilities can be seen with a spectrum analyzer. However, you will find that the spectrum analyzer generally is used to measure spectral purity of multiplex signals, percentage of modulation of AM signals, and modulation characteristics of fm and pulse-modulated signals. The spectrum analyzer is also used to interpret the displayed spectra of pulsed rf emitted from a radar transmitter.

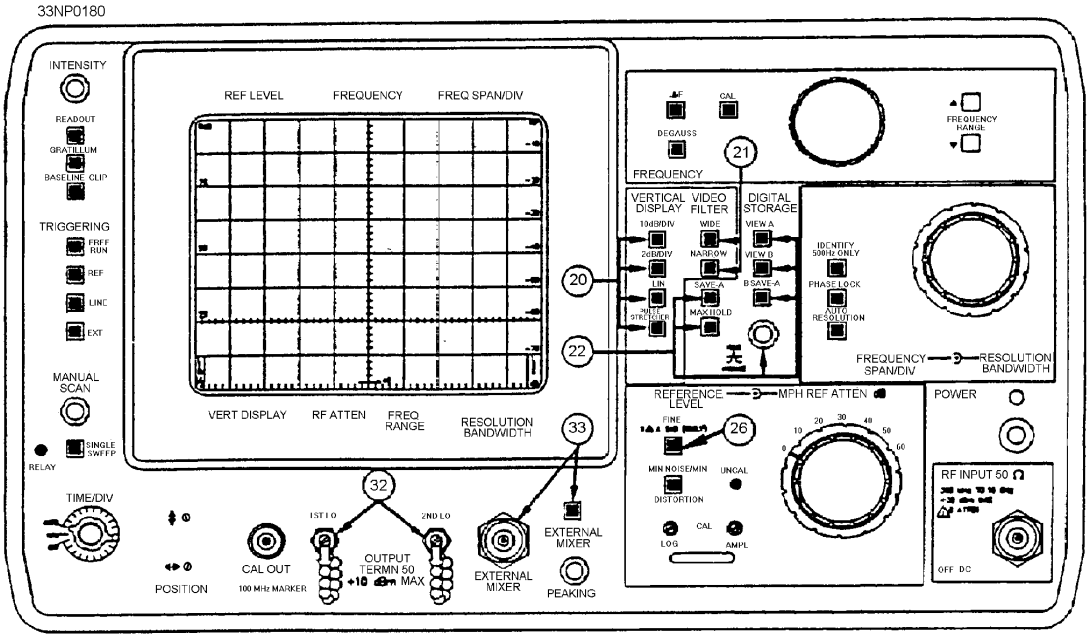

Figure 5-13.—Typical spectrum analyzer.

COMPLEX WAVEFORMS

Complex waveforms are divided into two groups, PERIODIC WAVES and NONPERIODIC WAVES. Periodic waves contain the fundamental frequency and its related harmonics. Nonperiodic waves contain a continuous band of frequencies resulting from the repetition period of the fundamental frequency approaching infinity and thereby creating a continuous frequency spectrum.

MODULATION MEASUREMENTS

In all types of modulation, the carrier is varied in proportion to the instantaneous variations of the modulating waveform. The two basic properties of the carrier available for modulation are the AMPLITUDE CHARACTERISTIC and ANGULAR (frequency or phase) CHARACTERISTIC.

Amplitude Modulation

The modulation energy in an amplitude-modulated wave is contained entirely within the sidebands. Amplitude modulation of a sinusoidal carrier by another sine wave would be displayed as shown in figure 5-14. For 100% modulation, the total sideband power would be one-half of the carrier power; therefore,

each sideband would be 6 dB less than the carrier, or one-fourth of the power of the carrier. Since the carrier component is not changed with AM transmission, the total power in the 100-percent-modulated wave is 50% higher than in the unmodulated carrier. The primary advantage of the log display that is provided by the spectrum analyzer over the linear display provided by the oscilloscopes for percentage of modulation measurements is that the high dynamic range of the spectrum analyzer (up to 70 dB) allows accurate measurements of values as low as 0.06%. It also allows the measurements of low-level distortion of AM signals. Both capabilities are illustrated in figure 5-15, view A, view B, and view C. The chart in figure 5-16 provides an easy conversion of dB down from carrier into percentage of modulation.

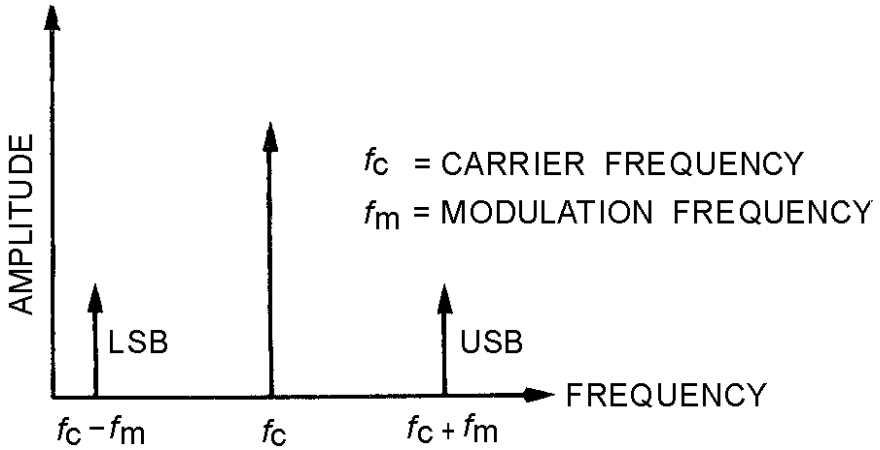

Figure 5-14.—Spectrum analyzer display of an AM signal.

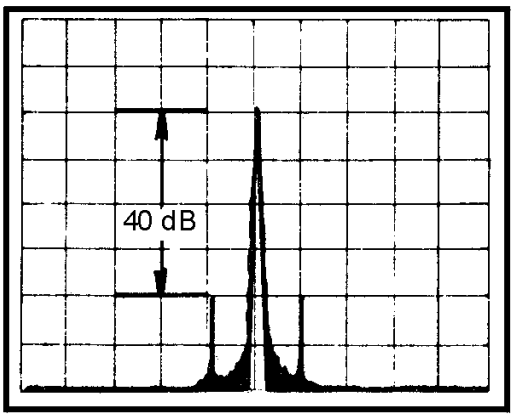

2% MODULATION
SIDEBANDS 40 dB DOWN

(A)

Figure 5-15A.—Spectrum analyzer displays of AM signals.

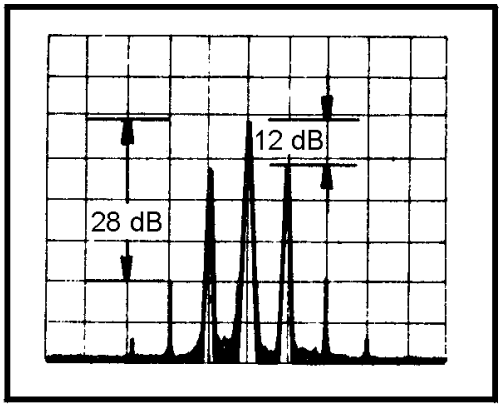

50% MODULATION
SIDEBANDS 12 dB DOWN
DISTORTION 28 dB DOWN

(B)

Figure 5-15B.—Spectrum analyzer displays of AM signals.

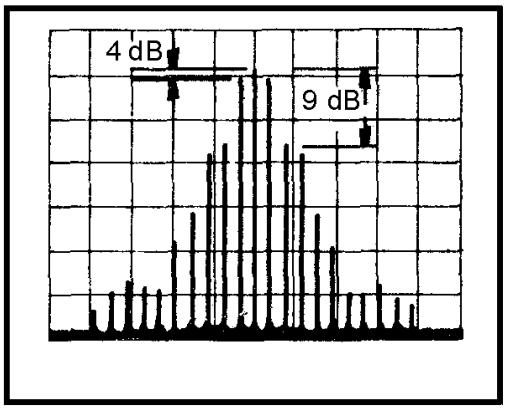

>100% MODULATION
SIDEBANDS 4 dB DOWN
DISTORTION 9 dB DOWN

(C)

Figure 5-15C.—Spectrum analyzer displays of AM signals.

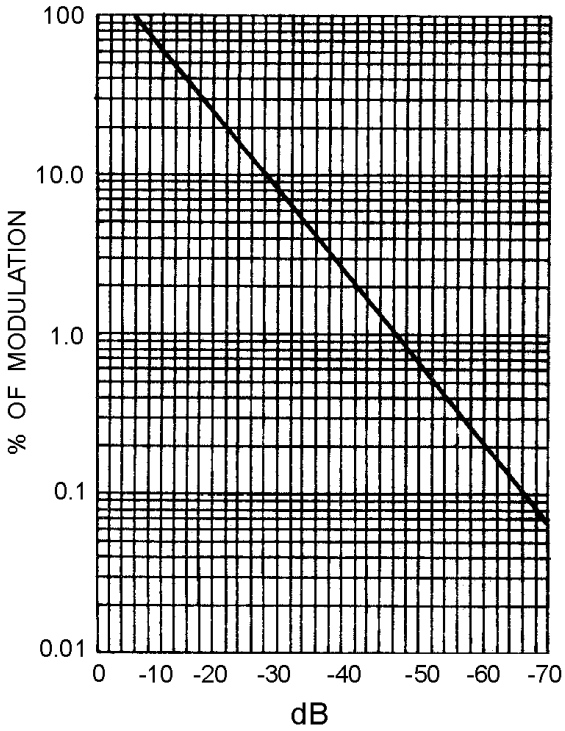

Figure 5-16.—Modulation percentage versus sideband levels.

NOTE: Anything greater than -6 dB exceeds 100% modulation and produces distortion, as shown in figure 5-16.

In modern, long-range hf communications, the most important form of amplitude modulation is ssb (single-sideband). In ssb either the upper or lower sideband is transmitted, and the carrier is suppressed. Ssb requires only one-sixth of the output power required by AM to transmit an equal amount of intelligence power and less than half the bandwidth. Figure 5-17 shows the effects of balancing the carrier of an AM signal. The most common distortion experienced in ssb is intermodulation distortion, which is caused by nonlinear mixing of intelligence signals. The two-tone test is used to determine if any intermodulation distortion exists. Figure 5-18 illustrates the spectrum analyzer display of the two-tone test with the modulation applied to the upper sideband input.

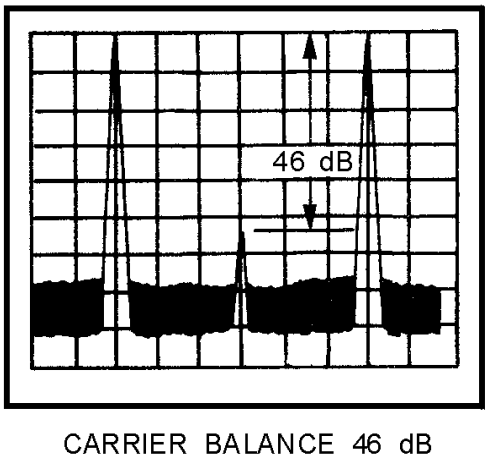

Figure 5-17.—Double sideband carrier suppressed.

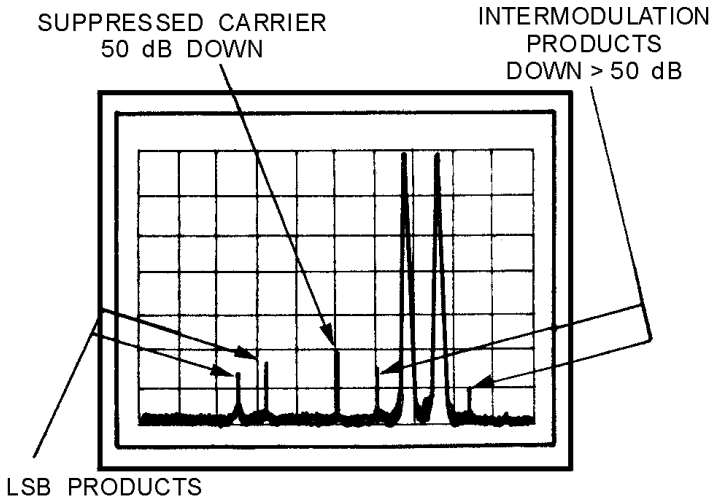

Figure 5-18.—Two-tone test.

Q-5. What is the advantage of single-sideband (ssb) transmission over AM transmission?

Frequency Modulation

In frequency modulation, the instantaneous frequency of the radio-frequency wave varies with the modulation signal. As mentioned in NEETS, module 12, the amplitude is kept constant. The number of times per second that the instantaneous frequency varies from the average (carrier frequency) is controlled by the frequency of the modulating signal. The amount by which the frequency departs from the average is controlled by the amplitude of the modulating signal. This variation is referred to as the FREQUENCY DEVIATION of the frequency-modulated wave. We can now establish two clear-cut rules for frequency deviation rate and amplitude in frequency modulation:

- Amount of frequency shift is proportional to the amplitude of the modulating signal.

(This rule simply means that if a 10-volt signal causes a frequency shift of 20 kilohertz, then a 20-volt signal will cause a frequency shift of 40 kilohertz.)

- Rate of frequency shift is proportional to the frequency of the modulating signal.

(This second rule means that if the carrier is modulated with a 1-kilohertz tone, then the carrier is changing frequency 1,000 times each second.)

The amplitude and frequency of the signal used to modulate the carrier will determine both the number of significant sidebands (shown in fig. 5-19) and the amplitude of the sidebands (shown in fig. 5-20). Both the number of significant sidebands and the bandwidth increase as the frequency of the modulating signal increases.

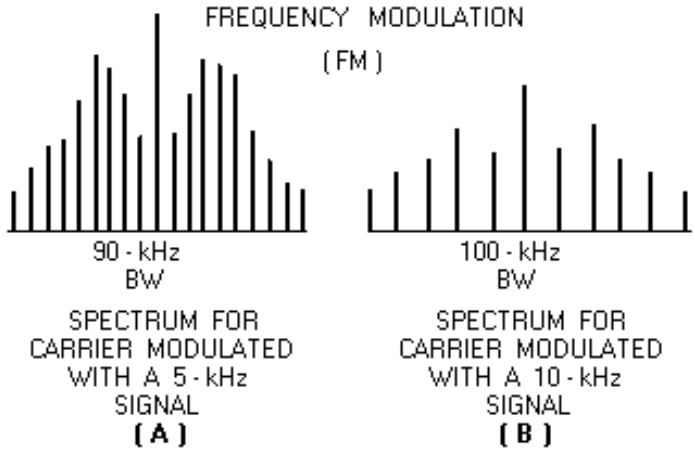

Figure 5-19.—Distribution of sidebands.

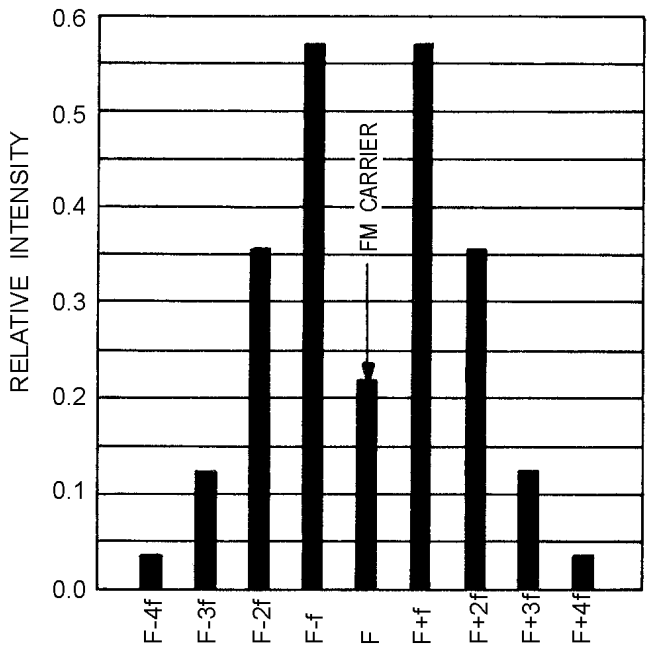

Figure 5-20.—Spectrum distribution for a modulation index of 2.

NEETS, module 12, should be consulted for an in-depth discussion of frequency-modulation principles.

Q-6. What happens to an fm signal as you increase the frequency of the modulating signal?

PULSED WAVES

An ideal pulsed radar signal is made up of a train of rf pulses with a constant repetition rate, constant pulse width and shape, and constant amplitude. To receive the energy reflected from a target, the radar receiver requires almost ideal pulse radar emission characteristics. By observing the spectra of a pulsed radar signal, you can easily and accurately measure such characteristics as pulse width, duty cycle, and

peak and average power. The principles of radar are covered in NEETS, Module 18, *Radar Principles*, which can be consulted for an explanation of pulsed waves.

Rectangular Pulse

A rectangular wave is used to pulse-modulate the constant frequency rf carrier to produce the pulse radar output. The rectangular wave is made up of a fundamental frequency and its combined odd and even harmonics. Figure 5-21 shows the development of a rectangular wave.

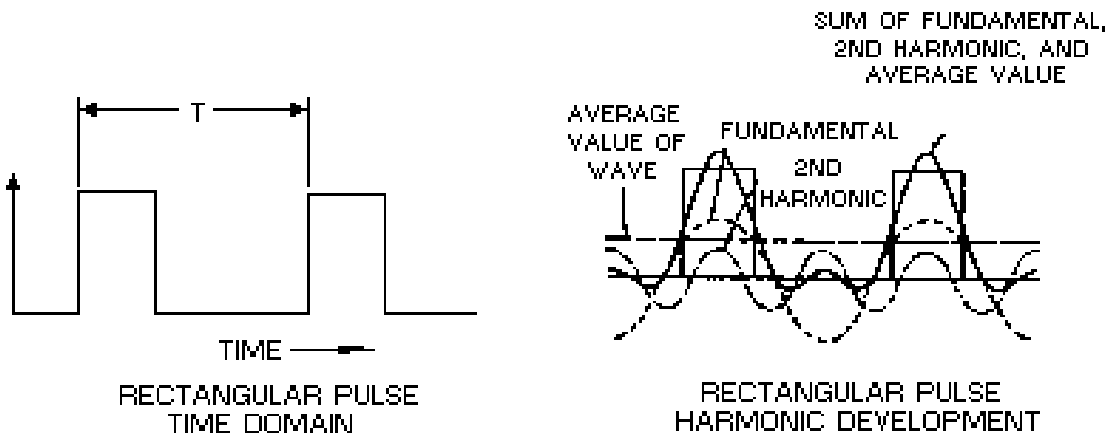

Figure 5-21.—Rectangular pulse.

Pulsed Wave Analysis

In amplitude modulation, sidebands are produced above and below the carrier frequency. A pulse is also produced above and below the carrier frequency, but the pulse is made up of many tones. These tones produce multiple sidebands that are commonly referred to as SPECTRAL LINES, or RAILS, on the spectrum analyzer display. Twice as many rails will be in the pulse-modulated output of the radar as there are harmonics contained in the modulating pulse (upper and lower sidebands), as shown in figure 5-22. In the figure, the pulse repetition frequency (prf) is equal to the pulse interval of 1/T. The actual spectrum analyzer display would show the lower lobes (shown below the reference line in the figure) on top because the spectrum analyzer does not retain any polarity information. Changing the pulse interval, or pulse width, of the modulation signal will change the amount of rails (prf), or number of lobe minima, as illustrated in figure 5-23.

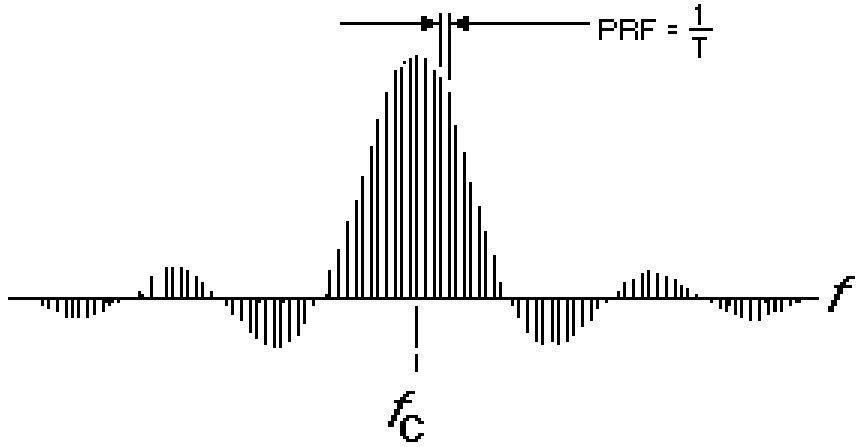

Figure 5-22.—Pulsed radar output.

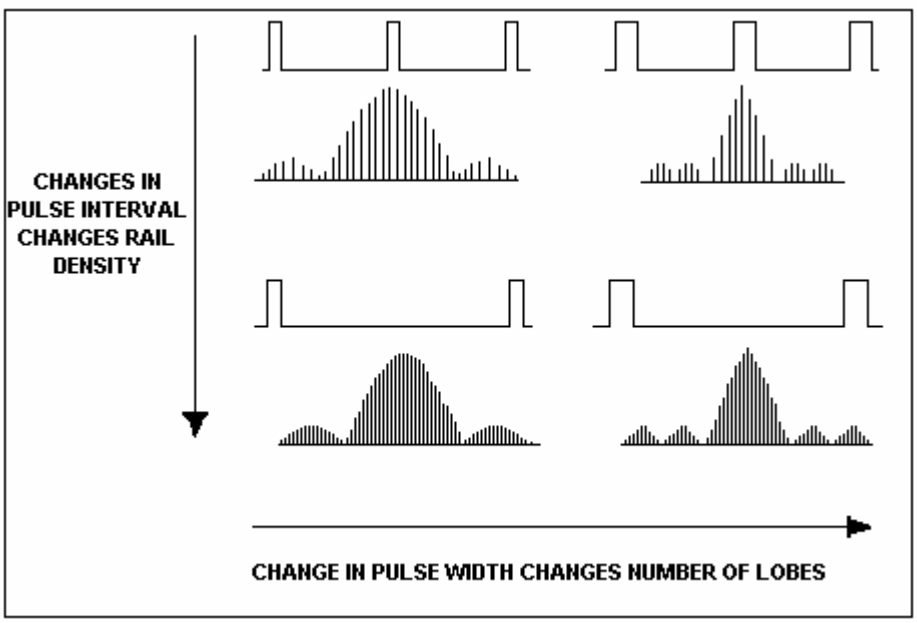

Figure 5-23.—Pulsed radar changes caused by modulating signal changes.

ANALYZING THE SPECTRUM PATTERN

The leading and trailing edges of the radiated pulse-modulated signal must have a sharp rise time and decay time and a constant amplitude between them. Incorrect pulse shape will cause frequency spread and pulling, which results in less available energy at the frequency to which the receiver is tuned. The primary reason for analyzing the spectrum is to determine the exact amount of amplitude and frequency modulation present. The amount of amplitude modulation determines the increase in the number of sidebands within the applied pulse spectrum; an increase in frequency modulation increases the amplitude of the side-lobe frequencies. In either case, the energy available to the main spectrum lobe is decreased.

SPECTRUM ANALYZER OPERATION

The information desired from the spectra to be analyzed determines the SPECTRUM ANALYZER requirements. Real-time analysis is used if a particular point in the frequency spectrum is to be analyzed, such as a line spectra display. Continuous- or swept-frequency analysis, which is the most common mode of observation, is used to display a wider portion of the frequency spectrum or (in some cases) the entire range of the spectrum analyzer in use. Changing the spectrum analyzer setting from one mode to another is accomplished by varying the scan time and the bandwidth of the spectrum analyzer or a combination of the two. Most real-time spectrum analyzers, however, are preceded by mechanical filters, which limit the input bandwidth of the spectrum analyzer to the desired spectra to be analyzed. Tunable- or swept-spectrum analyzers function basically the same as heterodyne receivers, the difference being that the local oscillator is not used but is replaced by a voltage-controlled oscillator (vco). The vco is swept electronically by a ramp input from a sawtooth generator. The output of the receiver is applied to a crt, which has its horizontal sweep in synchronization with the vco. The lower frequency appears at the left of the crt display. As the trace sweeps to the right, the oscillator increases in frequency. Figure 5-24 is a block diagram of a heterodyne spectrum analyzer.

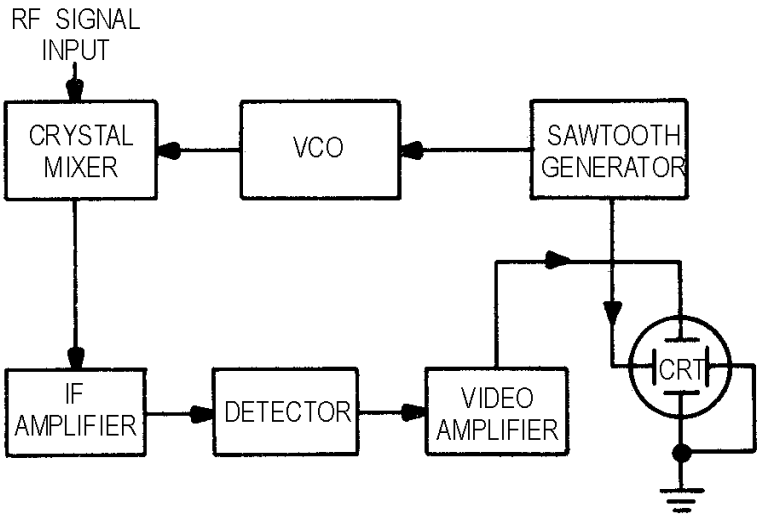

Figure 5-24.—Block diagram of a heterodyne spectrum analyzer.

Before the frequency of a signal can be measured on a spectrum analyzer, it must be RESOLVED. Resolving a signal means distinguishing it from other signals near it. Resolution is limited by the narrowest bandwidth of the spectrum analyzer because the analyzer traces out its own IF bandwidth shape as it sweeps through a signal. If the narrowest bandwidth is 1 kilohertz, the nearest any two signals can be, and still be resolved, is 1 kilohertz. Reducing the IF bandwidth indefinitely would obtain infinite resolution except that the usable IF bandwidth is limited by the stability of the spectrum analyzer. The smaller the IF bandwidth, the greater the capability of the analyzer to resolve closely spaced signals of unequal amplitudes. Modern spectrum analyzers have been refined to the degree that IF bandwidths are less than 1 hertz.

It is important that the spectrum analyzer be more stable in frequency than the signals being measured. The stability of the analyzer depends on the frequency stability of its vco. Scan time of the spectrum analyzer must be long enough, with respect to the amplitude of the signal to be measured, to allow the IF circuitry of the spectrum analyzer to charge and recover. This will prevent amplitude and frequency distortion.

Q-7. When referring to spectrum analyzers, what is meant by the term resolving signals?

TIME-DOMAIN REFLECTOMETRY

TIME-DOMAIN REFLECTOMETRY is a testing and measurement technique that has found increasing usefulness in testing transmission lines (both metallic and fiber-optic), cables, strip lines, connectors, and other wideband systems or components. Basically, time-domain reflectometry is an extension of an earlier technique in which reflections from an electrical pulse were monitored to locate faults and to determine the characteristics of power transmission lines. You can compare time-domain reflectometry to a closed-loop radar system in which the transmitted signal, a very fast step pulse, is fed into the system and the reflections resulting from discontinuities or impedance deviations in the system are monitored on a crt.

The technique used in time-domain reflectometry consists of feeding an impulse of energy into the system and then observing that energy as it is reflected by the system at the point of insertion. When the fast-rise input pulse meets with a discontinuity or impedance mismatch, the resultant reflections appearing at the feed point are compared in phase, time, and amplitude with the original pulse. By analyzing the magnitude, deviation, and shape of the reflected waveform, you can determine the nature of the impedance variation in the transmission system. Also, since distance is related to time and the amplitude of the reflected step is directly related to impedance, the comparison indicates the distance to the fault as well as the nature of the fault. Figure 5-25, view A, view B, view C, and view D, illustrates typical transmission line problems that can easily be identified by using a time-domain reflectometer (tdr). In addition to showing both the distance to and the nature (resistive, inductive, or capacitive) of each line discontinuity, time-domain reflectometry also reveals the characteristic impedance of the line and indicates whether losses are shunt or series. They are also used to locate and analyze connectors and splices.

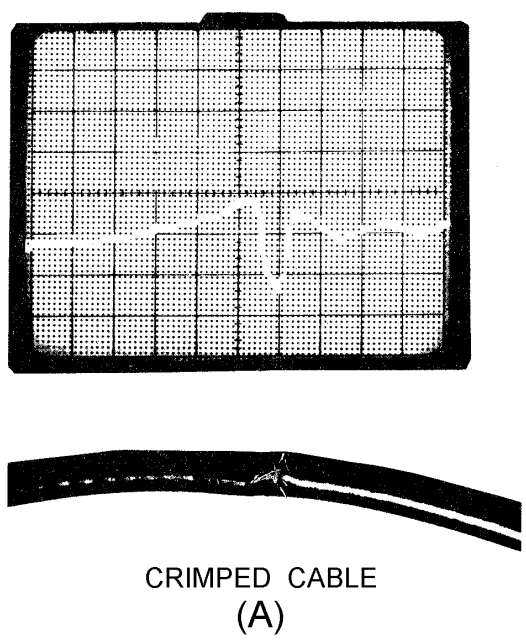

Figure 5-25A.—Time-domain reflectometer display of transmission line problems.

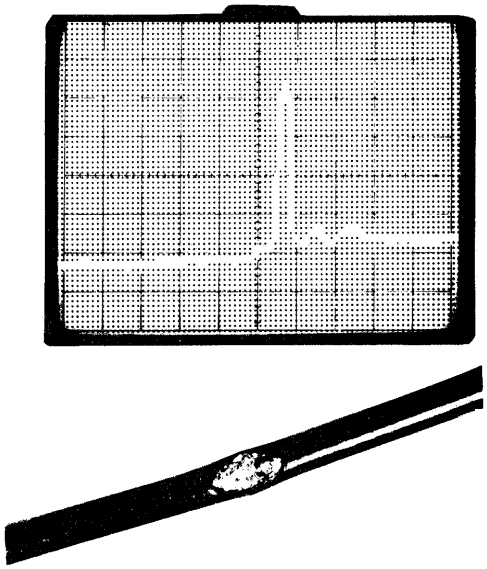

FRAYED CABLE
(B)

Figure 5-25B.—Time-domain reflectometer display of transmission line problems.

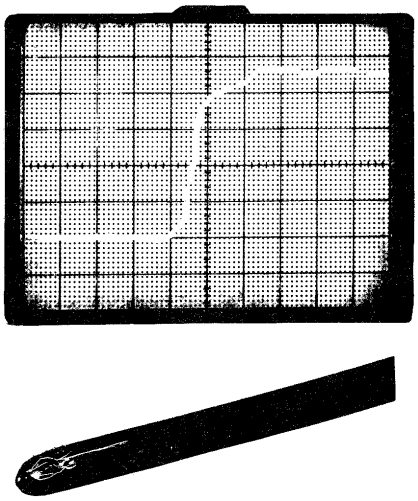

OPEN CABLE
(C)

Figure 5-25C.—Time-domain reflectometer display of transmission line problems.

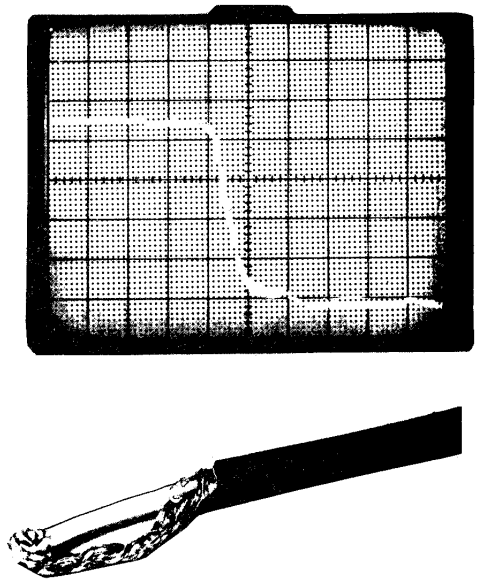

SHORTED CABLE
(D)

Figure 5-25D.—Time-domain reflectometer display of transmission line problems.

A conventional method of evaluating high-frequency transmission systems and components has been through the use of standing wave ratio (swr) measurements to obtain an overall indication of transmission line performance. This method involves feeding a sine-wave signal into the system and measuring the maximum and minimum amplitudes of the standing waves that result from system discontinuities or load mismatches. The ratio between the minimum and maximum swr values is then taken as the system FIGURE OF MERIT. The swr measurement, however, does not isolate individual discontinuities or mismatches when multiple reflections are present; it only indicates their total effect. Time-domain reflectometry measurements, on the other hand, isolate the line characteristics in time (location). As a result, multiple reflections resulting from more than one discontinuity or impedance variation that are separated in distance on the line are also separated in time at the monitoring point and can be individually analyzed.

Prior to the advent of time-domain reflectometers, time-domain reflectometry was performed with the aid of sampling oscilloscopes and pulse generators with very fast rise times.

Figure 5-26 shows the earlier type of test setup, which is still an option. However, today's time-domain reflectometers have several advantages over the old pulse-generator and oscilloscope methods. Modern time-domain reflectometers are compact, lightweight, are often supplied with battery pack options for field use, and provide a direct readout of distances instead of time. Some equipments provide a paper-tape recording for a permanent record. Figure 5-27 shows a typical time-domain reflectometer.

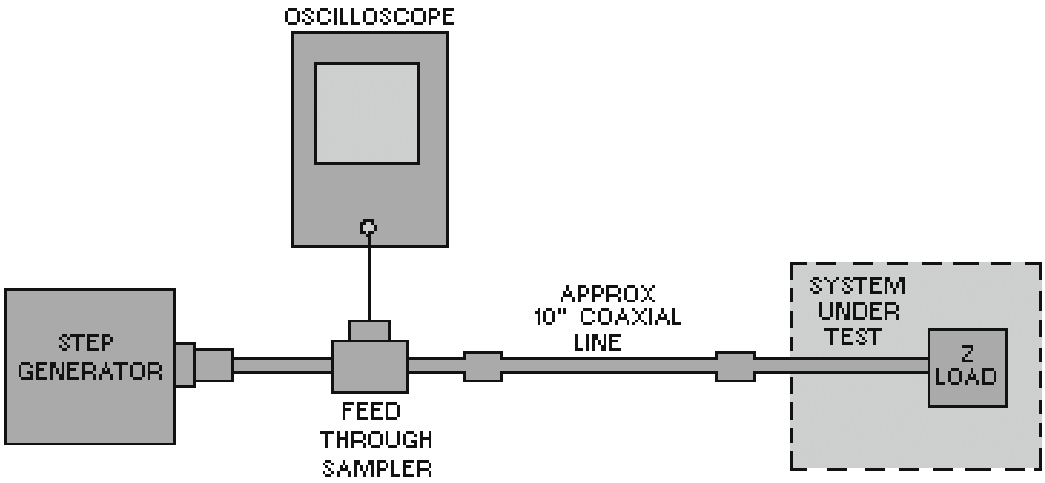

Figure 5-26.—Time-domain reflectometry, basic equipment setup.

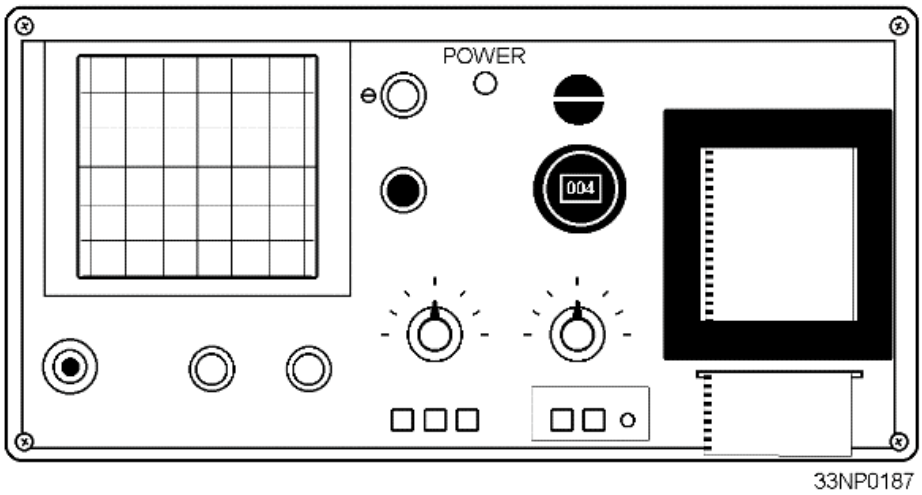

Figure 5-27.—Typical time-domain reflectometer.

Q-8. Why are time-domain reflectometers often compared to a radar system?

Q-9. What is the main advantage of using a time-domain reflectometer (tdr) to test a transmission line?

SWEPT-FREQUENCY TESTING EQUIPMENT

SWEPT-FREQUENCY testing is used to determine the bandwidth, alignment, frequency response, impedance matching, and attenuation in various circuits, systems, and components. Swept-frequency testing can be used to quickly determine the broadband response of a device that otherwise would require a number of separate measurements and manual plotting of the response curve. Swept-frequency

techniques are applicable over the entire electronic spectrum from vlf to ehf and are generally limited only by your resourcefulness and the basic limitation of the equipment employed. The basic swept-frequency arrangement is shown in figure 5-28.

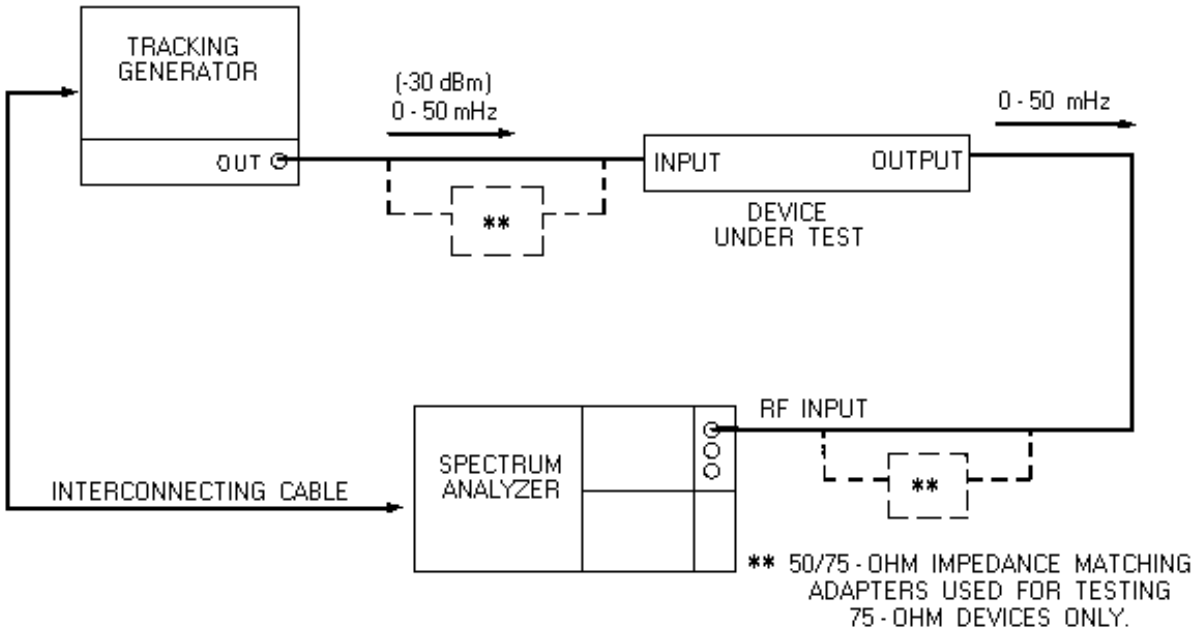

Figure 5-28.—Frequency-response test.

The swept-frequency technique can effectively determine the frequency response of an amplifier or filter and is useful in the alignment or bandwidth determination of an IF or rf stage. The test equipment permits direct visual readout on the crt of the spectrum analyzer. The spectrum analyzer can also be connected to an X-Y chart recorder if a permanent record or print is desired. Figure 5-29 shows a spectrum analyzer crt display of the frequency response of a multicoupler. The tracking generator used must be capable of sweeping the desired frequency range of the device under test.

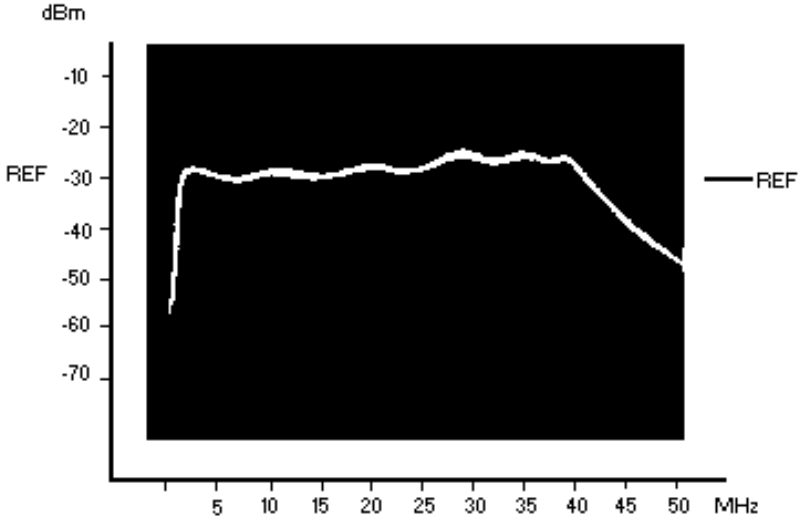

Figure 5-29.—Typical spectrum analyzer frequency-response display.

Q-10. What is the purpose of swept-frequency testing?

TRACKING GENERATOR

Figure 5-30 shows a typical tracking generator used with the Hewlett-Packard 141 T spectrum analyzer. A TRACKING GENERATOR is basically a sweep generator in which the sweep rate is matched to that of the spectrum analyzer. The output circuitry of the tracking generator contains a network that ensures a constant output amplitude over the entire range being swept. When the fm signal produced by the tracking generator is applied to a device or circuit under test, the instantaneous output amplitude is always proportional to the response of the circuit to the frequency at that instant. Thus, the original fm input signal is changed in passing through the circuit under test. The output signal, therefore, would consist of an fm signal that is also amplitude-modulated. For equal deviations, the positive and negative portions of this envelope are symmetrical, making it necessary to observe only one side of the envelope. After the detection stage in the spectrum analyzer, only the modulation remains to appear on the face of the crt. This presentation will appear as a continuous curve because of the persistence of vision and the phosphor characteristic of the crt. The polarity of the detector determines whether a positive or a negative output is displayed. The frequency at any point on the crt display can be analyzed by arresting the scan of the spectrum analyzer either electronically or manually at the point of interest. For greater accuracy in frequency determination, a frequency counter may be attached to the output of the tracking generator at the point of the arrested scan.

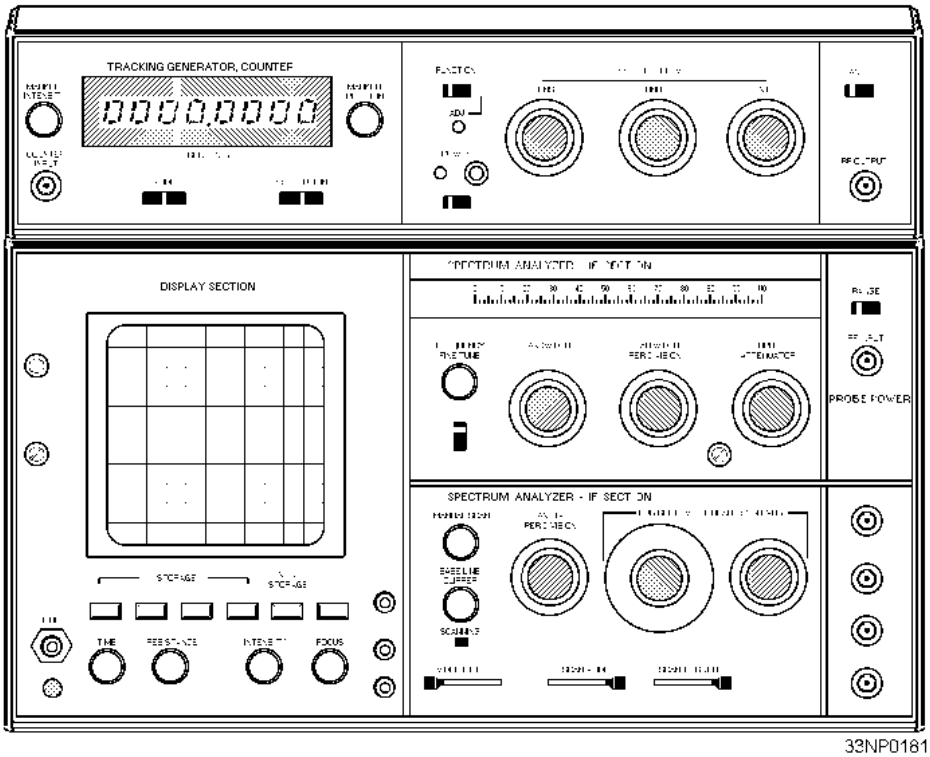

Figure 5-30.—Tracking generator used with a spectrum analyzer.

IMPEDANCE MATCHING

Conventional tuners cannot be used successfully to cancel source or load reflections in swept-frequency measurements. This is because the tuning is effective only at single frequencies; therefore, pads

or isolators are required. However, by the use of automatic-level control, the power output of the sweep generator can be maintained relatively constant at the point of measurement. The source impedance may thus be maintained very close to the nominal value. With this arrangement, any impedance variation in the connecting cables, connectors, and adapters is effectively cancelled since these components are within the leveling loop. The attenuation of a device under test will be displayed on the associated crt as a continuous response curve as it is scanned. This will result in an attenuation versus frequency plot of the device under test only.

IMPEDANCE

Circuit impedance is measured conveniently by using the reflectometer principle. The individual values of the incident and reflected signals (swr) in a transmission line feeding an unknown impedance are measured. The ratio between these signals indicates how closely the load impedance matches that of the transmission line.

Another method is the use of an auto-mechanical load control to hold the forward power at a constant level while the return load of a specific load is measured. A short is then placed in the circuit, and 100% reflected power is measured. The loss detected is then calculated to obtain swr figures.

NOISE FIGURE

By using a frequency-sweeping receiver and an automatic noise-figure meter, you can make noise-figure measurements on broadband microwave devices, such as a traveling-wave-tube amplifier. To conduct such a test properly, you must first check the receiver noise figure.

Q-11. In swept-frequency testing the impedance of a transmission line, what electrical characteristic is actually being measured?

SWEEPING ANTENNAS

Antenna system testing is one of the more common and useful applications for using the swept-frequency technique. The main parameters that an antenna system is tested for are vswr, frequency response, and impedance. Figure 5-31 shows a typical test setup for testing a transmitting antenna for vswr. Remember that any transmitting antenna can also act as a receiving antenna and send induced power from adjacent antennas back to the test equipment. You should make an initial power check on the antenna to prevent damage to your test equipment. Figure 5-32 shows a typical hf transmitting antenna vswr display as measured using the swept-frequency technique. The setup for testing a receiving antenna vswr, shown in figure 5-33, is similar, with the exception of the attenuators. The measured vswr (within the operating frequency range) of any broadband antenna should not exceed a vswr of 2.5 to 1. The vswr for any single-tuned antenna should not exceed 1.5 to 1 at the tuned frequency.

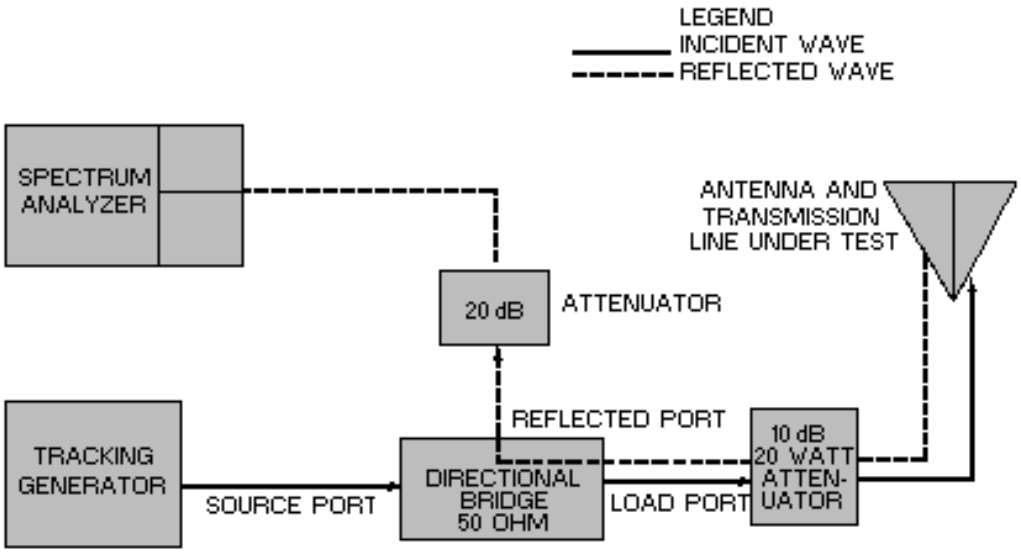

Figure 5-31.—Vswr test for transmitting antennas.

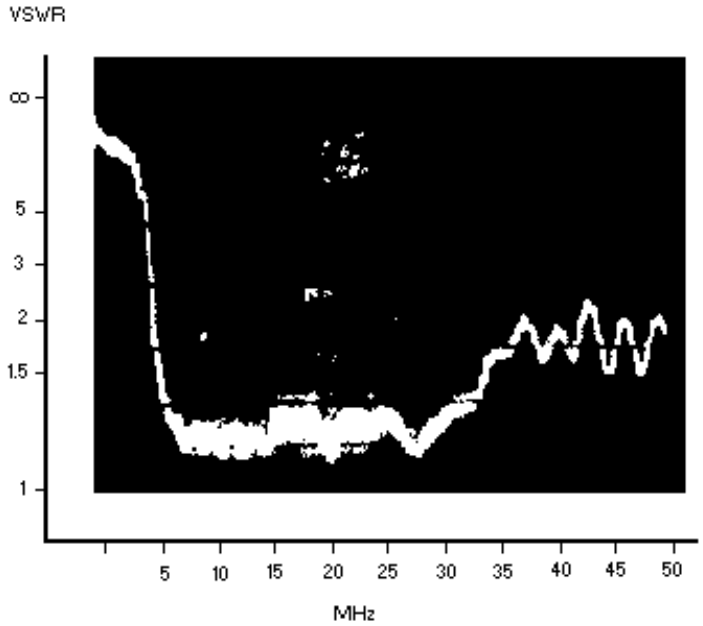

Figure 5-32.—Typical spectrum analyzer vswr display.

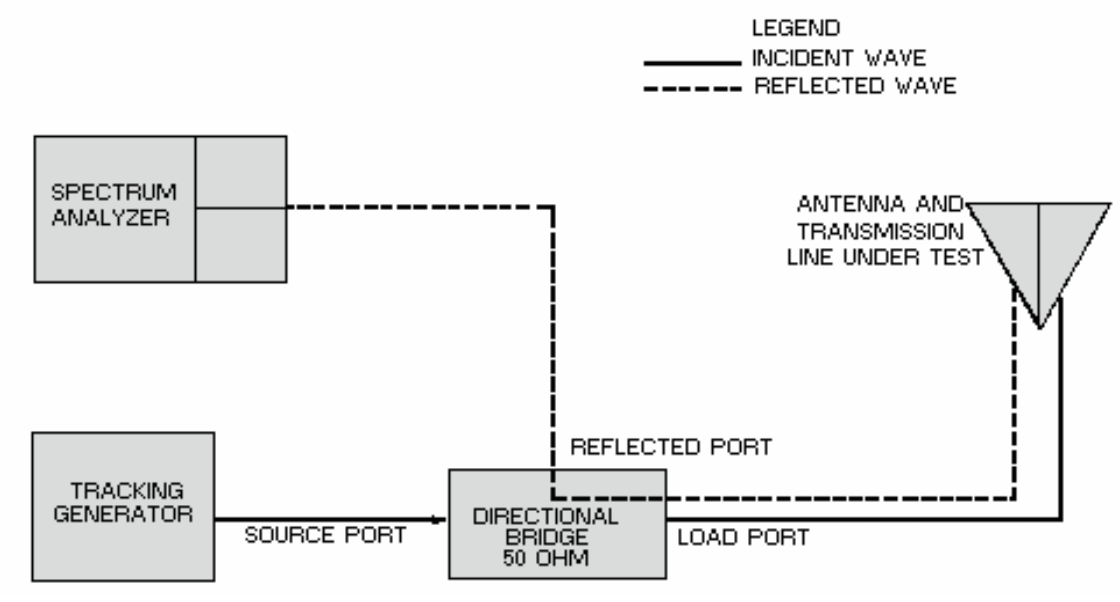

Figure 5-33.—Vswr test for receiving antennas.

Q-12. What precautions must be taken when sweeping a transmitting antenna?

SUMMARY

This chapter has presented information on waveform interpretation. The information that follows summarizes the important points of this chapter.

Interpretation of a waveform is best accomplished with test equipment that gives you a visual indication of the waveform. The most common devices used in systems applications are **OSCILLOSCOPES** and **SPECTRUM ANALYZERS**.

An amplitude-modulated signal can be tested with either an oscilloscope or a spectrum analyzer to determine its percentage of modulation, sideband characteristics, and carrier frequency. Frequency-modulated signals are normally tested with a spectrum analyzer or a modulation analyzer.

Oscilloscopes are designed to view a time-domain waveform (amplitude versus time). Spectrum analyzers are designed to view a frequency-domain waveform (amplitude versus frequency). One advantage of using a spectrum analyzer is its ability to graphically display the composition of **COMPLEX WAVEFORMS**.

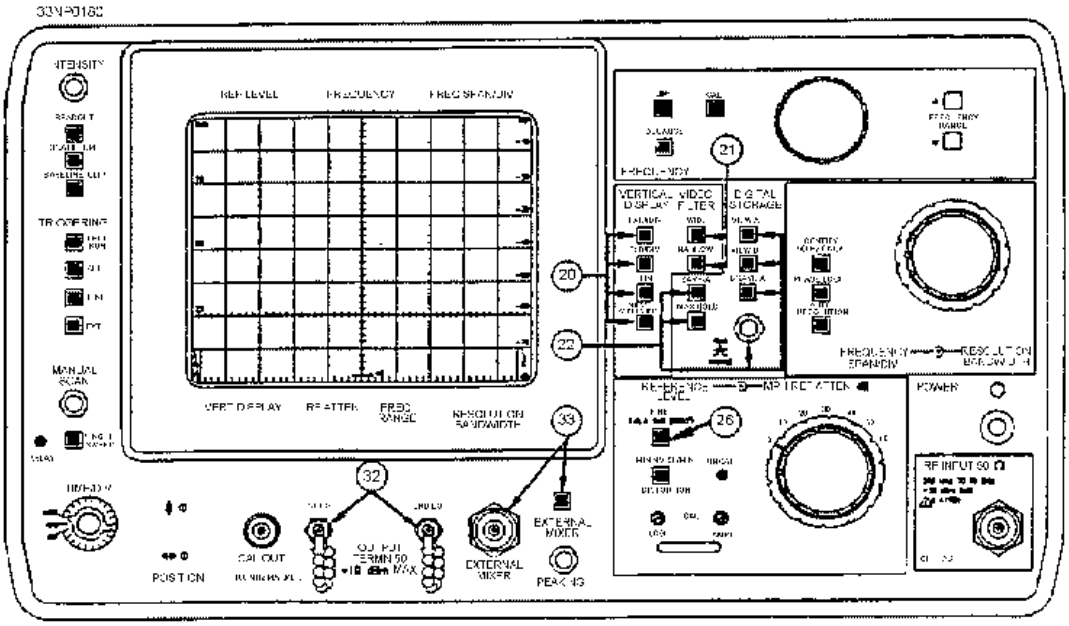

TIME-DOMAIN REFLECTOMETERS work on a principle similar to that used in radar. A precise signal is produced by the time-domain reflectometer and injected into the device under test (usually a transmission line); and the resulting reflections are displayed to discover such things as

impedance mismatches, opens, and shorts. The display sections of time-domain reflectometers are calibrated to give you a graphical display of amplitude versus distance.

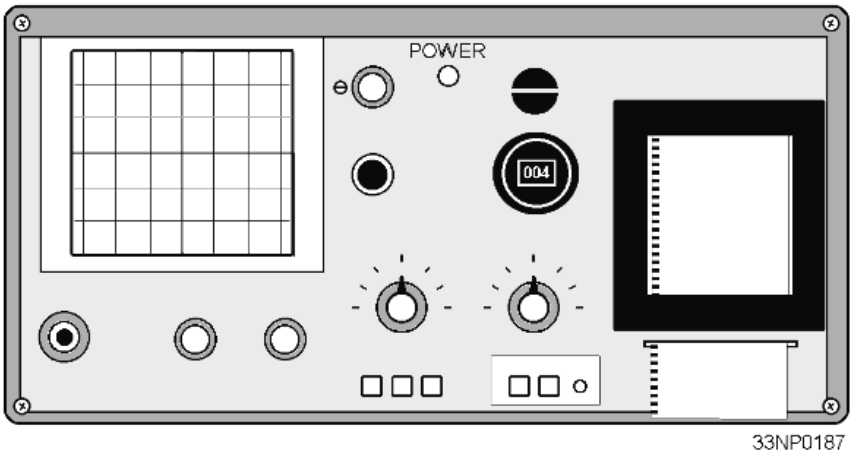

SWEPT-FREQUENCY TESTING is performed by using a **TRACKING GENERATOR** to inject a signal into a device and then monitoring the output of the device with a spectrum analyzer. The tracking generator is designed to sweep or scan through the entire frequency range of the device being tested. Its sweep rate must be matched with the sweep rate of the spectrum analyzer.

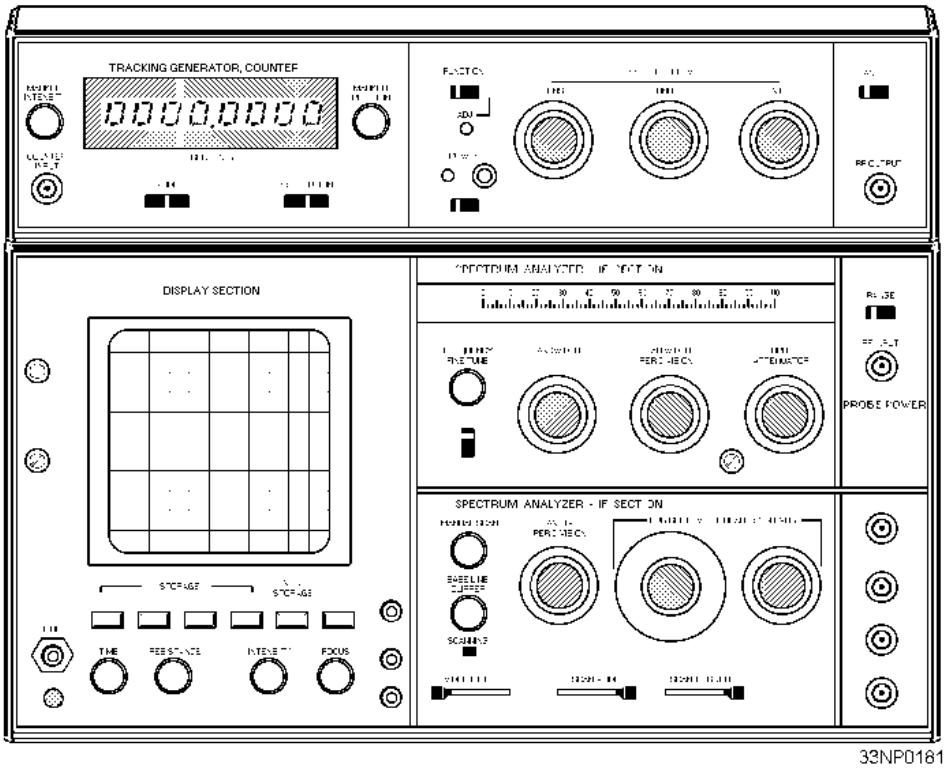

REFERENCES

Communications Systems, *NAVTELCOMINST 2313.1, Naval Telecommunications Command, Washington, D.C., 1984.*

EIMB, Test Methods and Practices, *NAVSEA 0967-LP-000-0130, Naval Sea Systems Command, Washington, D.C., 1980.*

Modulation Principles, *NAVEDTRA 172-12-00-83. Naval Education and Training Professional Development and Technology Center, Pensacola, Fla., 1983.*

ANSWERS TO QUESTIONS Q1. THROUGH Q12.

A-1. Distortion.

A-2. 60% to 95%.

A-3. The difference between the carrier frequency of an fm signal and its maximum frequency excursion when modulated.

A-4. Amplitude versus frequency (the frequency domain of the signals).

A-5. The same amount of intelligence can be transmitted with one-sixth of the output power with less than one-half the bandwidth.

A-6. Both the bandwidth and the number of significant sidebands increase.

A-7. The ability of the analyzer to discriminate between display signals of slightly different frequencies.

A-8. Both transmit a pulse and analyze the signal reflection.

A-9. A Tdr will indicate the nature of and the distance to or location of any faults.

A-10. To determine various characteristics of a component, piece of equipment, or system over its operational frequency range.

A-11. Swr on the transmission line.

A-12. You must ensure that power induced from any adjacent transmitting antennas does not damage your test equipment.

APPENDIX I

GLOSSARY

ABSORPTION WAVEMETER—A device used for measuring frequency, consisting of a tuned circuit or cavity that is loosely coupled to the frequency being measured. Maximum energy is absorbed at the resonant frequency.

BOLOMETER—An rf detector that converts rf power to heat, which causes a change in the resistance of the material used in the detector. This change in resistance varies in proportion with the amount of applied power and is used to measure the amount of applied power.

CALORIMETER—A device that measures rf power by measuring the heat the rf power generates.

CAVITY WAVEMETER—An instrument used to measure microwave frequencies. The resonant frequency of the cavity is determined by its inside dimensions.

COAXIAL-LINE WAVEMETERS—A shorted section of a coaxial line used to measure rf frequencies. It is calibrated in either wavelength or frequency.

CROSS MODULATION—An intermodulation condition that occurs when a carrier is modulated by an undesired signal.

CURRENT PROBE—An inductive device used for measuring the current in a conductor. Probes are designed to be clamped around the insulated conductor.

CURRENT TRACER—An inductively coupled device used for tracing current paths to determine the cause of low-impedance faults on a printed-circuit board.

DECADE RESISTOR (DECADE RESISTANCE BOX)—It typically has two or more sections, each containing 10 precision resistors wired to selector switches. A piece of test equipment that provides a ready source of various resistances for engineering and measurement applications.

DECIBEL (dB)—A standard unit for expressing *relative* power levels as the ratio of power out to power in.

dBm—A unit used to express power levels above or below a l-milliwatt reference level at a designated load impedance (usually 600 ohms).

DIFFERENTIAL VOLTMETER—A precision voltmeter that measures an unknown voltage by comparing it to a precision internal-reference voltage supply.

ELECTROSTATIC-DISCHARGE SENSITIVE (ESDS) DEVICE—Electronic components that are susceptible to damage from static charges.

FIBER OPTICS—Conductors that are usually constructed of plastic or glass fibers that readily pass light. Used primarily for transmission of high-speed data over relatively short distances.

FREQUENCY DEVIATION—Refers to the difference between the carrier frequency of an fm signal and the instantaneous frequency of its modulated wave.

FREQUENCY DOMAIN—A plot of frequency versus amplitude as shown by a spectrum analyzer display.

FREQUENCY RESPONSE—(I) The ability of a component or device to operate over a portion of the frequency spectrum. (2) In reference to test equipment, that portion of the frequency spectrum that the test equipment is capable of sensing and measuring accurately.

GALVANOMETER—A meter used to measure small values of current by electromagnetic or electrodynamic means.

IMPEDANCE ANGLE METER—A device that measures circuit impedance by comparing the phase angle between voltage and current.

INSERTION LOSS—The difference between the amount of power applied to a load before and after the insertion of a device in the line.

INTEGRATED CIRCUIT (IC)—(1) A circuit in which many elements are fabricated and interconnected by a single process (into a single chip), as opposed to a nonintegrated circuit in which the transistors, diodes, resistors, and other components are fabricated separately and then assembled. (2) Elements inseparably associated and formed on or within a single substrate.

INTERMODULATION DISTORTION—Nonlinear distortion characterized by the appearance (at the system output) of frequencies equal to the sums and differences of two or more frequencies present at the input.

LOAD—(I) A device through which an electric current flows that changes electrical energy into another form. (2) Power consumed by a device or circuit in performing its function.

LOGIC CLIPS—A device that can be clipped onto an in-circuit, dual-in-line package (DIP) logic IC to determine the logic state of each pin of the IC.

LOGIC PROBE—A hand-held probe used to determine the logic state (high or low) of test points in a logic circuit. A logic high is represented by a lit indicator light on the probe.

LOGIC PULSER—A hand-held probe used to pulse, or change the logic state, of in-circuit logic ICs.

METROLOGY CALIBRATION (METCAL) PROGRAM—A Navy calibration program designed to ensure the accuracy of test equipment through comparisons with calibration laboratory standards of known accuracy.

MICROPHONICS—Electrical noise caused by the mechanical motion of the internal parts of a device. The term is usually associated with vacuum tubes.

MODULATION INDEX—When a sine wave is used to modulate an fm signal, the ratio of the frequency deviation to the frequency of the modulating wave.

NATIONAL BUREAU OF STANDARDS (NBS)—A bureau of the United States government that is responsible for maintaining the nation's electrical and physical standards. The accuracy of all *calibrated* test equipment is traceable to NBS through the Navy's METCAL program.

OPTICAL TIME-DOMAIN REFLECTOMETER (OTDR)—A piece of test equipment used to test a fiber-optic cable for such things as attenuation, localized losses, and defects. It transmits an optical pulse (usually a laser) into the fiber-optic cable and analyzes the resulting reflections in terms of amplitude versus distance.

PARALLAX ERROR—The error in meter readings that results when you look at a meter from some position other than directly in line with the pointer and meter face. A mirror mounted on the meter face aids in eliminating parallax error.

PARASITIC—In electronics, an undesirable frequency in an electronic circuit. Usually associated with vacuum-tube amplifiers and oscillators.

PERCENT OF MODULATION—In AM signals, the ratio of half the difference between the maximum and minimum amplitudes of a modulated wave to its average amplitude.

RF IMPEDANCE BRIDGE—A piece of test equipment used for measuring the combined resistance and reactance of a component, piece of equipment, or system at rf frequencies.

SENSITIVITY—In reference to test equipment, the ratio of the response of the test equipment to the magnitude of the measured quantity. Sometimes expressed indirectly by stating the property by which sensitivity is computed (e.g., ohms per volt).

STANDARD—An exact value of an electrical quantity (established by international agreement), which serves as a model for measurement of that quantity.

STANDING WAVE—The distribution of voltage and current along a transmission line formed by the incident and reflected waves, which has minimum and maximum points on a resultant wave that appears to stand still.

STROBOSCOPE—An instrument that allows viewing of rotating or reciprocating objects by producing the optical effect of a slowing or stopping motion.

SWEPT-FREQUENCY TESTING—Testing the frequency response of a component or system by applying an rf signal, in which the frequency is varied back and forth through a set frequency range at a steady rate, to the input of a device. The output is then monitored to determine the amplitude of the output with respect to frequency.

THERMISTOR—(1) A semiconductor device in which the resistance varies with temperature. (2) A type of bolometer characterized by a decrease in resistance as the dissipated power increases.

TIME-DOMAIN REFLECTOMETER—A piece of test equipment used to test a transmission line for defects, such as shorts and opens. It transmits an electrical pulse into the transmission line and analyzes the resulting reflections in terms of emplidute versus distance.

TRAIC—A three-terminal device that is similar to two SCRs back-to-back with a common gate and common terminals. Although similar in construction and operation to the SCR, the Triac controls and conducts current flow during both alternations of an ac cycle.

TUNING FORK—A two-pronged mechanical device that is designed to vibrate only at its natural frequency. In electronics, it is used primarily to determine the correct speed of a motor.

UNIJUNCTION TRANSISTOR (UJT)—A three-terminal, semiconductor device with a negative-resistance characteristic that is used in switching circuits, oscillators, and wave-shaping circuits.

VOLUME UNIT (VU)—Unit of measurement of a complex audio signal such as voice or music. A 0 level is referenced to 1 milliwatt of power into a 600-ohm load.

WAVEMETERS—(1) Calibrated resonant circuits that are used to measure frequency. (2) An instrument for measuring the wavelength of an rf wave.

ZENER DIODE—A pn-junction diode designed to operate in the reverse-bias breakdown region.

MODULE 21 INDEX

A

Absorption power meters, 3-16 to 3-21
Ac voltage measurements, 1-7 to 1-8
Accuracy of bridge measurements, 4-6
af power, 3-12
Alkaline and carbon-zinc batteries, 2-33
Amplitude modulation, 5-15 to 5-19
Amplitude-modulation measurements, 5-2 to 5-5
Antennas and transmission lines, impedance testing of, 3-10
Attenuation and insertion loss measurements of transmission lines, 4-8
Audio-frequency measurements, 3-26 to 3-32

B

Basic measurements, 1-1 to 1-26
- capacitor measurements, 1-15 to 1-18
  - bridge-type measurements, 1-16 to 1-17
  - reactance-type measurements, 1-17
- current measurements, 1-9 to 1-12
  - current probes, 1-10
  - current tracers, 1-9
  - digital multimeter method, 1-9
  - multimeter method, 1-9
  - oscilloscope method, 1-11 to 1-12
- inductance measurement, 1-18 to 1-22
  - hay bridge, 1-19
  - maxwell bridge, 1-21
  - measurement of inductance using the vtvm, 1-22
  - reactance measuring equipment, 1-21
- introduction to measurements, 1-1 to 1-3
- rcl bridges, 1-14
  - differential voltmeters, 1-14
  - meggers, 1-14
- references, 1-25
- resistance measurements, 1-12 to 1-15
  - multimeter method, 1-13
  - vtvm method, 1-22
- voltage measurements, 1-3 to 1-8

Basic measurements—Continued
- ac voltage measurements, 1-7 to 1-8
  - differential voltmeter method, 1-8
  - digital multimeter method, 1-8
  - multimeter method, 1-8
  - oscilloscope method, 1-8
  - vacuum tube voltmeter method, 1-22
- dc voltage measurements, 1-3 to 1-6
  - differential voltmeter method, 1-6
  - digital multimeter method, 1-5 to 1-6
  - electronic voltmeter method, 1-6
  - multimeter method, 1-3 to 1-4
  - oscilloscope method, 1-4 to 1-5

Battery measurements, 2-32 to 2-34
- carbon-zinc and alkaline batteries, 2-33
- dry batteries, 2-33
- mercury cells, 2-34
- nickel-cadmium batteries, 2-34
- storage batteries, 2-32

Bolometer, 3-18 to 3-19
Bridge methods, 3-1 to 3-9, 4-3 to 4-5

C

Calorimeters, 3-21 to 3-25
Capacitor measurements, 1-15 to 1-18
- bridge-type, 1-16 to 1-17
- reactance-type, 1-17

Carbon-zinc and alkaline batteries, 2-33
Component testing, 2-1 to 2-48
- battery measurements, 2-32 to 2-34
  - carbon-zinc and alkaline batteries, 2-33
  - dry batteries, 2-33
  - mercury cells, 2-34
  - nickel-cadmium batteries (NICAD), 2-34
  - storage batteries, 2-32
- fiber-optic testing, 2-37 to 2-43

Component testing—Continued
automatic test equipment, 2-38 to 2-39
optical multimeter, 2-38
optical ohmmeter, 2-38
optical power meter, 2-38
optical time-domain reflectometer (OTDR), 2-38
oscilloscope, 2-38
radiometer/photometer, 2-38
integrated circuit (IC) testing, 2-28 to 2-34
logic analyzer, 2-32
logic clips, 2-29
logic comparators, 2-29
logic probes, 2-30 to 2-31
logic pulsers, 2-31
introduction to component testing, 2-1
rf attenuators and resistive load tests, 2-34 to 2-37
50/75-ohm terminations, 2-36
decade resistors, 2-35
decade (step) attenuators, 2-36
fixed rf attenuators, 2-35
summary, 2-43 to 2-48
testing electron tubes, 2-1 to 2-8
electron tube testers, 2-3 to 2-6
auxiliary compartment, 2-4 to 2-5
front panel, 2-3 to 2-4
operation, 2-5 to 2-6
program cards, 2-5
high-power hf amplifier tube tests, 2-6 to 2-8
crossed-field amplifier, 2-8
klystron tube tests, 2-6 to 2-7
magnetron tube tests, 2-8
traveling-wave tube, 2-7 to 2-8
substitution methods, 2-2 to 2-3
testing semiconductors, 2-8 to 2-27
diode characteristic graphical display, 2-17 to 2-19
reverse voltage-current analysis, 2-18 to 2-19
zener diode test, 2-20
diode testers, 2-16 to 2-17
Component testing—Continued
rf diode test, 2-16
switching diode test, 2-17
diode testing, 2-16
field-effect transistor (FET) tests, 2-23 to 2-27
N-channel test, 2-25
P-channel test, 2-25
MOSFET testing, 2-25 to 2-27
MOSFET (depletion/enhancement type) test, 2-27
MOSFET (enhancement type) test, 2-27
silicon-controlled rectifiers (SCR), 2-21
static resistance measurements, 2-20
transistor testing, 2-9 to 2-16
electrostatic discharge sensitive (ESDS) care, 2-12 to 2-15
resistance test, 2-9
transistor testers, 2-10 to 2-12
triac, 2-22
unijunction transistors (UJTs), 2-22
Composite-coil, iron-core, and torsion-head wattmeters, 3-15
Counter method, frequency, 3-32
Cross-modulation and parasitic generation, 4-11
Cross-field amplifier, 2-8
Current measurement, 1-8 to 1-12

D

Dc voltage measurements, 1-3 to 1-6
Decibel meters, 3-12
Differential voltmeters, 1-14
Diode characteristic graphical display, 2-17 to 2-19
reverse voltage-current analysis, 2-18 to 2-19
zener diode test, 2-20
Diode testers, 2-16 to 2-17
rf diode test, 2-16
switching diode test, 2-17
Dry batteries, 2-33

E

Electrodynamic wattmeter, 3-13 to 3-15
Electron tubes, testing, 2-1 to 2-8
    electron tube testers, 2-3 to 2-6
    high-power hf amplifier tube tests, 2-6 to 2-8
    substitution methods, 2-2 to 2-3
Electrostatic discharge sensitive (ESDS) care, 2-12 to 2-16

F

Fiber-optic testing, 2-37 to 2-43
    automatic test equipment, 2-38 to 2-39
    optical multimeter, 2-38
    optical ohmmeter, 2-38
    optical power meter, 2-38
    optical time-domain reflectometer (OTDR), 2-38
    oscilloscope, 2-38
    radiometer/photometer, 2-38
Field-effect transistor (FET) tests, 2-23 to 2-27
    N-channel test, 2-25
    P-channel test, 2-25
Flow calorimeters, 3-23 to 3-25
Frequency measurements, 3-26 to 3-32
Frequency modulation, 5-8
Frequency-domain display capabilities, 5-11 to 5-15

G

Glossary, AI-1 to AI-4

H

Hay bridge, 1-19, 3-7
High-power hf amplifier tube tests, 2-6 to 2-8
    crossed-field amplifier, 2-8
    klystron tube tests, 2-6 to 2-7
    magnetron tube tests, 2-8
    traveling-wave tube, 2-7 to 2-8

I

Impedance matching, 5-29 to 5-30
Impedance measurements, 3-1, 3-9 to 3-10
Inductance measurement, 1-18 to 1-22
Integrated circuit (IC) testing, 2-28 to 2-34
    logic analyzer, 2-32
    logic clips, 2-29
    logic comparators, 2-29
    logic probes, 2-30 to 2-31
    logic pulsers, 2-31
Intermodulation, 4-11
    distortion detection, 4-11
    distortion measurements, 4-11
In-line wattmeters, 3-17
Iron-core, composite-coil, and torsion-head wattmeters, 3-15

K

Kelvin bridge, to 3-6
Klystron tube tests, 2-6 to 2-7

L

Learning objectives, 1-1, 2-1, 3-1, 4-1, 5-1
Loss measurement, 4-8

M

Magnetron tube tests, 2-8
Maxwell bridge, 1-21, 3-7
Measurements, basic, 1-1 to 1-26
Measurements, modulation, 5-2 to 5-8
Mechanical rotation and vibration methods, 3-28 to 3-31
Meggers, 1-14
Mercury cells, 2-34
Milliammeter and neon-lamp methods, 4-3
Modulation display, types of, 5-5 to 5-6
Modulation measurements, 5-2 to 5-8, 5-15 to 5-20
    amplitude modulation, 5-15 to 5-19
    amplitude-modulation measurements, 5-2 to 5-5
    frequency modulation, 5-8
    single-sideband measurements, 5-6 to 5-8
VHF and UHF measurements, 5-5
MOSFET testing, 2-25 to 2-27

N

Neon-lamp and milliammeter methods, 4-3
Nickel-cadmium batteries (NICAD), 2-34

O

Oscilloscope measurement methods, 5-5
Oscilloscope method, 3-31
Output power meters, 3-16

P

Power measurements, 3-11 to 3-25
Power output versus impedance matching, 4-6
Probes, 4-2
Pulsed waves, 5-21

Q

Qualitative measurements, 4-1 to 4-14
- introduction to qualitative measurements, 4-1
- standing-wave ratio, (swr) measurements, 4-2 to 4-8
  - accuracy of bridge measurements, 4-6
  - attenuation and insertion loss measurements of transmission lines, 4-8
  - bridge methods, 4-3
  - cross-modulation and parasitic generation, 4-11
  - intermodulation distortion detection, 4-11
  - intermodulation distortion measurements, 4-11
  - loss measurement, 4-8
  - neon-lamp and milliammeter methods, 4-3
  - power output versus impedance matching, 4-6
  - probes, 4-2
  - resistance-capacitance bridge, 4-3 to 4-5
  - swr meters, 4-6 to 4-8

Qualitative measurements—Continued
- transmission-line formulas, 4-9 to 4-12

Quantitative measurements, 3-1 to 3-39
- frequency measurements, 3-26 to 3-32
  - audio-frequency measurements, 3-26 to 3-32
  - frequency counter method, 3-32
  - frequency standards, 3-26 to 3-28
  - frequency-measurement methods, 3-26
  - mechanical rotation and vibration methods, 3-28 to 3-31
    - frequency counter methods, 3-31
    - stroboscope methods, 3-29 to 3-31
    - tuning fork methods, 3-28
  - oscilloscope method, 3-31
  - radio-frequency (rf) measurements, 3-33 to 3-37
    - frequency counter accuracy, 3-34
    - frequency counters, 3-30 to 3-34
    - frequency meters, 3-33
    - wavemeters, 3-35 to 3-37
- introduction to quantitative measurements, 3-1 to 3-11
  - bridge methods, 3-1 to 3-9
    - Hay bridge, 3-7
    - Kelvin bridge, 3-6
    - Maxwell bridge, 3-7
    - resistance-ratio bridge, 3-6
    - Schering bridge, 3-7
    - Wheatstone bridge, 3-5
  - constant-current impedance-measuring technique, 3-9
  - impedance measurements, 3-1
  - impedance testing of antennas and transmission lines, 3-10
  - impedance-angle meter, 3-9
  - vector bridges, 3-7 to 3-8
- power measurements, 3-11 to 3-25
  - absorption power meters, 3-16 to 3-21
    - bolometer, 3-18 to 3-19

Quantitative measurements—Continued
bolometer power meter, 3-19
in-line wattmeters, 3-17
output power meters, 3-16
af power, 3-12
calorimeters, 3-21 to 3-25
flow calorimeters, 3-23 to 3-25
static calorimeters, 3-21 to 3-23
decibel meters, 3-12
electrodynamic wattmeter, 3-13 to 3-15
iron-core, composite-coil, and torsion-head wattmeters, 3-15
vacuum tube voltmeter, 3-15
volume unit meters, 3-12

R

rcl bridges, 1-14
References, 1-25, 2-46, 3-38, 4-13, 5-35
Resistance measurements, 1-12 to 1-15
Resistance-capacitance bridge, 4-3 to 4-5
Resistance-ratio bridge, 3-6
rf attenuators and resistive load tests, 2-34 to 2-37
50/75-ohm terminations, 2-36
decade resistors, 2-35
decade (step) attenuators, 2-36
fixed rf attenuators, 2-35
rf, radio-frequency measurements, 3-33 to 3-37

S

Schering bridge, 3-7
Semiconductors, testing, 2-8 to 2-27
diode characteristic graphical display, 2-17 to 2-19
diode testers, 2-16 to 2-17
diode testing, 2-16
field-effect transistor (FET) tests, 2-23 to 2-27
MOSFET testing, 2-25 to 2-27
silicon-controlled rectifiers (SCR), 2-21
static resistance measurements, 2-20
transistor testing, 2-9 to 2-16
Triac, 2-22
unijunction transistors (UJTs), 2-22
Silicon-controlled rectifiers (SCR), 2-21
Single-sideband measurements, 5-6 to 5-8
Spectrum analyzer applications, 5-15
Spectrum analyzer operation, 5-23
Spectrum pattern, analyzing the, 5-22
Spectrum waveform analysis and measurements, 5-9 to 5-22
analyzing the spectrum pattern, 5-22
complex waveforms, 5-15
frequency-domain display capabilities, 5-11 to 5-15
modulation measurements, 5-15 to 5-20
pulsed waves, 5-21
spectrum analyzer applications, 5-15
spectrum analyzer operation, 5-23
Standards, frequency, 3-26 to 3-28
Standing-wave ratio, (swr) measurements, 4-2 to 4-8
Static calorimeters, 3-21 to 3-23
Static resistance measurements, 2-20
Storage batteries, 2-32
Stroboscope methods, 3-29 to 3-31
Sweeping antennas, 5-30 to 5-32
Swept-frequency testing equipment, 5-27 to 5-32
impedance matching, 5-29 to 5-30
noise figure, 5-30
tracking generator, 5-29

T

Time-domain reflectometry, 5-24 to 5-27
Torsion-head, iron-core, and composite-coil wattmeters, 3-15
Tracking generator, 5-29
Transistor testing, 2-9 to 2-16
electrostatic discharge sensitive (ESDS) care, 2-12 to 2-15
resistance test, 2-9
transistor testers, 2-10 to 2-12
Transmission-line formulas, 4-9 to 4-12
Traveling-wave tube, 2-7 to 2-8
Triac, 2-22
Tuning fork methods, 3-28

U

UHF and VHF measurements, 5-5
Unijunction transistors (UJTs), 2-22

V

Vacuum tube voltmeter, 3-15
Vector bridges, 3-7 to 3-8
VHF and UHF measurements, 5-5
Voltage measurements, 1-3 to 1-8
    ac, 1-7 to 1-8
    dc, 1-3 to 1-6
Volume unit meters, 3-12

W

Waveform interpretation, introduction to, 5-1 to 5-35
    modulation measurements, 5-2 to 5-8
        amplitude-modulation measurements, 5-2 to 5-5
            oscilloscope measurement methods, 5-5
            types of modulation display, 5-5 to 5-6
        frequency modulation, 5-8
        single-sideband measurements, 5-6 to 5-8
        VHF and UHF measurements, 5-5
    references, 5-35
    spectrum waveform analysis and measurements, 5-9 to 5-22
Waveform interpretation, introduction to—Continued
        analyzing the spectrum pattern, 5-22
        complex waveforms, 5-15
        frequency-domain display capabilities, 5-11 to 5-15
        modulation measurements, 5-15 to 5-20
            amplitude modulation, 5-15 to 5-19
            frequency modulation, 5-19 to 5-20
        pulsed waves, 5-20 to 5-22
            pulsed wave analysis, 5-21
            rectangular pulse, 5-21
        spectrum analyzer applications, 5-15
        spectrum analyzer operation, 5-23
    sweeping antennas, 5-30 to 5-32
    swept-frequency testing equipment, 5-27 to 5-32
        impedance, 5-30
        impedance matching, 5-29 to 5-30
        noise figure, 5-30
        tracking generator, 5-29
        time-domain reflectometry, 5-24 to 5-27
Waveforms, complex, 5-15
Wavemeters, 3-35 to 3-37
Wheatstone bridge, 3-5

Z

Zener diode test, 2-20

Assignment Questions

<u>Information</u>: The text pages that you are to study are provided at the beginning of the assignment questions.

ASSIGNMENT 1

Textbook assignment: Chapter 1, “Basic Measurements,” pages 1-1 through 1-26. Chapter 2, “Component Testing,” pages 2-1 through 2-8.

1-1. What is the purpose of the Navy's Metrology Calibration Program?

1. To provide the fleet with new types of test equipment
2. To provide quality control for your test equipment
3. To improve the efficiency of sophisticated electronic systems
4. To establish test equipment pools from which technicians can borrow

1-2. At each higher echelon METCAL calibration laboratory, the accuracy of the test equipment increases by a factor of

1. 10
2. 2
3. 100
4. 4

1-3. Most equipment technical manuals contain voltage charts. For which of the following purposes are they used?

1. To list the equipment's power supplies
2. To list the input power requirements of the equipment
3. To provide handy reference guides for calculating voltage drops across fixed impedances
4. To list correct voltages at major test points

THIS SPACE LEFT BLANK INTENTIONALLY.

1-4. Which, if any, of the following statements correctly describes the effect input impedance of test equipment can have on readings taken?

1. The greater the input impedance of your test equipment, the less accurate the readings
2. The lower the input impedance of your test equipment, the more accurate the readings
3. A piece of test equipment with an infinite input impedance will absorb no energy and readings will be more accurate
4. None of the above

1-5. A piece of test equipment with a low input impedance can cause readings taken to be inaccurate. To eliminate this problem, the input impedance of your test equipment should exceed the impedance of the circuit under test by what minimum ratio?

1. 1 to 1
2. 2 to 1
3. 10 to 1
4. 100 to 1

THIS SPACE LEFT BLANK INTENTIONALLY.

USE THE FOLLOWING INFORMATION TO ANSWER QUESTION 1-6: YOU NEED TO TAKE A CRITICAL VOLTAGE READING, BUT YOU DO NOT HAVE A HIGH IMPEDANCE METER AVAILABLE. INSTEAD, YOU CONNECT TWO LOWER IMPEDANCE METERS IN SERIES AND PLACE THEM ACROSS THE COMPONENT IN QUESTION. YOU ADD THE READINGS SHOWN ON THE TWO METERS TO GET YOUR MEASUREMENT.

1-6. Compared to using just one of the lower impedance meters, what is the advantage of using two meters connected in series?

1. Input impedance increases and voltage-measuring accuracy increases
2. Frequency response of the test setup doubles
3. Accuracy of current measurements decreases
4. Input impedance decreases and voltage-measuring accuracy increases

1-7. On an analog multimeter, where on the scale are the most accurate readings taken?

1. At the highest end of the scale
2. At the lowest end of the scale
3. Midscale
4. It makes no difference if the meter is properly calibrated

1-8. What can you do to reduce the problem of meter-reading errors caused by parallax?

1. Close one eye when reading the meter
2. Use short meter leads
3. Use a meter that has a mirror built into the scale
4. View the meter face from either the left or right side, but not directly in front

1-9. For what primary reason are oscilloscopes used in circuit testing?

1. They provide a visual presentation of the signal under test
2. They present a low input impedance to the circuit under test
3. They provide numerical readouts of signals under test
4. They measure voltages more accurately than other pieces of test equipment

1-10. THIS QUESTION HAS BEEN DELETED.

1-11. Digital multimeters effectively eliminate which of the following disadvantages of analog meters?

1. Parallax
2. Low impedance
3. Poor accuracy
4. All of the above

1-12. Which of the following pieces of test equipment is most accurate for measuring dc voltages?

1. Vtvm
2. Oscilloscope
3. Digital voltmeter
4. Differential voltmeter

1-13. If you exceed the frequency limitations of your voltmeter, which of the following results is likely?

1. The meter will be destroyed
2. The circuit under test will be damaged
3. The measurement will be inaccurate
4. The meter will indicate average voltage

1-14. When performing measurements with an oscilloscope, you should ensure that the trace extends across what minimum portion of the vertical viewing area?

1. 15%
2. 25%
3. 45%
4. 60%

1-15. When using an oscilloscope to measure a high voltage, you should use which of the following procedures?

1. Use the logic probe instead of the normal probe
2. Use the high voltage probe instead of the normal probe
3. Use two oscilloscopes connected in series
4. Place a 10-ohm shunt across the vertical input of the oscilloscope

1-16. Oscilloscopes are normally calibrated to display which of the following types of voltages?

1. Peak
2. Average
3. Peak-to-peak
4. Both 2 and 3 above

1-17. When using an oscilloscope to observe a sine wave, what, if anything, must you do to determine the rms voltage?

1. Divide the observed peak-to-peak voltage by 3.65
2. Multiply the observed peak-to-peak voltage by 2; then divide by 1.414
3. Divide the observed peak-to-peak voltage by 2; then multiply by 0.707
4. Nothing

1-18. The frequency-measuring capabilities of a digital multimeter can be extended by using which of the following devices?

1. An rf probe
2. A frequency doubler
3. A high-voltage probe
4. A frequency divider network

1-19. When performing ac voltage measurements, you should use which of the following pieces of equipment to obtain the most accurate reading?

1. A differential voltmeter
2. An oscilloscope
3. A Simpson 260
4. A wattmeter

1-20. For which of the following purposes would you connect two ammeters in parallel?

1. To perform voltage measurements
2. To increase frequency-measuring capabilities
3. To decrease input impedance
4. To increase input impedance

1-21. When taking measurements with two ammeters connected in parallel, how do you determine the resulting readings?

1. The current equals the sum of both meter readings
2. The current equals the difference of the two meter readings
3. The current equals the product of the two readings divided by their sum
4. Read either meter directly; the same current flows through both meters

1-22. Current tracers indicate the presence of a current in which of the following ways?

1. By the lighting of an indicator lamp
2. By a clicking noise
3. Both 1 and 2 above
4. By the movement of a meter

1-23. Which of the following is an advantage of using a current probe?

1. It is the most accurate method of measuring current
2. It senses current by induction without being connected directly into the circuit
3. It is battery operated
4. It is capable of measuring current at frequencies above 40 GHz

1-24. When troubleshooting a specific piece of equipment, you can find an accurate listing of resistance readings for specific test points in which of the following documents?

1. In equipment PMS cards
2. In test equipment manuals
3. In equipment technical manuals
4. In Naval Ships Technical Manuals

1-25. An ohmmeter that is used for field work should meet which of the following criteria?

1. It should be extremely accurate
2. It should be portable
3. It should be simple to operate
4. Both 2 and 3 above

1-26. When you use an analog multimeter to measure resistance, which of the following actions should you take first?

1. Make sure the meter is zeroed
2. Set the meter for dc voltage
3. Set the meter for ac voltage
4. Make sure the meter leads do not exceed 36 inches

1-27. Digital multimeters are used to test semiconductors for which of the following reasons?

1. They produce voltage sufficient to gate all Zener diodes
2. Their LED displays are easier to read than analog displays
3. They typically limit the current flow through the semiconductor to less than 1 milliamp
4. They produce in excess of the 500 milliamps normally required to gate a PN junction

1-28. Compensation for the resistance in test leads of digital multimeters used to perform resistance measurements is accomplished by which, if any, of the following methods?

1. Short the leads, note the lead resistance displayed, and add this value to subsequent resistance measurements
2. Short the leads, note the lead resistance displayed, and subtract the value from subsequent resistance measurements
3. Add 10% to the reading
4. None of the above

1-29. Which of the following is a typical use for a megger?

1. Testing MOSFETs
2. Testing filter capacitors
3. Testing thermistor mounts
4. Testing an ac power cord for insulation breakdown

1-30. When large capacitors are stored as spare parts, why should their terminals be shorted with a piece of wire?

1. It prevents dielectric leakage
2. It prevents deterioration of the plates
3. It prevents the capacitors from becoming charged when in close proximity to an rf field
4. It prevents electrolytic capacitors from changing value during periods of storage

1-31. Capacitance meters can be grouped into which of the following basic categories?

1. Wheatstone type and Kelvin Varley type
2. Bridge-type and reactance-type
3. Depletion-type and enhancement-type
4. Resistive-type and reactive-type

1-32. Which of the following statements correctly describes the accuracy and use of a reactance-type capacitance meter?

1. It gives approximate values and is usually portable
2. It gives approximate values and is used in calibration laboratories only
3. It is very accurate and is usually portable
4. It is very accurate and is used to measure capacitors that have a high power factor

1-33. Which of the following types of inductor core materials produces the greatest inductance?

1. Mica
2. Magnetic metal
3. Polyparoloxylene
4. Nonmagnetic metal

1-34. As frequency increases, the inherent resistance of the inductor causes which of the following types of losses to become more critical?

1. Hysteresis
2. Skin effect
3. Eddy currents
4. Standing waves

1-35. Most capacitance test sets are capable of testing capacitors and what other type of component?

1. TRIACS
2. Inductors
3. Resistors
4. Barretters

1-36. When using reactance-type test equipment to measure inductance, what relationship exists between the inductor and the voltage drop across the reactance of the inductor?

1. The voltage drop is directly proportional to the value of inductance
2. The voltage drop is inversely proportional to the value of inductance
3. The voltage drop is proportional to the dielectric constant (K) of the inductor
4. The voltage drop is inversely proportional to the frequency of the applied voltage

.

1-37. Aboard ship you should be able to troubleshoot equipment failures to the component level for which of the following reasons?

1. Ships must be self-sustaining units when deployed
2. Storage space on board ships limits the number of bulky items or electronic modules that can be stored
3. Individual components may be easier to obtain than modules or larger equipment pieces
4. All of the above

1-38. What is the most common cause of electron tube failures?

1. Vibration damage
2. Open filaments
3. Shorted elements
4. Power supply voltage surges

1-39. The simplest way to test a tube is by which of the following methods?

1. Using a tube tester
2. Measuring tube element voltages
3. Feeling for signs of overheating
4. Substituting tubes

1-40. Test conditions for the electron tube tester described in the text are set by which of the following methods?

1. By a technician setting switches
2. By using a magnetic tape program
3. By using a prepunched card program
4. By inserting the tube into the appropriate socket

1-41. The electron tube tester can be used to test common low-power tubes for which of the following conditions?

1. Gas
2. Quality
3. Leakage
4. Each of the above

1-42. Pushbuttons on the electron tube tester are used to test for which of the following conditions?

1. Emission
2. Transconductance
3. Other quality tests
4. Each of the above

1-43. Which of the following tests is automatically performed when the electron tube tester card switch is first actuated?

1. Gas
2. Shorts
3. Opens
4. Quality

1-44. Which of the following methods is normally used to test high-power amplifier tubes?

1. Using tube testers
2. Performing interelectrode resistance checks
3. Making gain measurements with an oscilloscope
4. Observing built-in meters that measure grid and plate current and power output

1-45. Which, if any, of the following problems occur when klystrons are left in storage or not used for more than 6 months?

1. They become gassy
2. The elements become tarnished and ruin the tube
3. All external metallic parts become tarnished and must be cleaned prior to use
4. None

1-46. Which of the following actions should you take to restore operation if the klystron is gassy?

1. Replace the klystron with a new one
2. Return it to the nearest depot for intermediate maintenance
3. Evacuate the gas by igniting the tube's getter
4. Operate it at reduced beam voltage for approximately 8 hours

1-47. Traveling-wave tubes (twt) should be replaced if they deviate from design specifications by what minimum percentage?

1. 1%
2. 10%
3. 25%
4. 33%

1-48. If a twt used as an oscillator fails, which of the following indications should you observe?

1. The twt will become noisy
2. Equipment line fuses will blow
3. The twt will have reduced output power
4. The twt will fail to break into oscillation when all other conditions are normal

1-49. Which of the following is an appropriate reason to use transistors instead of electron tubes?

1. Transistors are more rugged than electron tubes
2. Transistors are not as heat sensitive as electron tubes
3. Transistors are not as sensitive as electron tubes to voltage overloads
4. Transistors are capable of handling greater amounts of power than electron tubes

1-50. When using an ohmmeter to test a transistor's base-to-emitter or base-to-collector junction, what minimum back-to-forward resistance ratio should you expect to read?

1. 5 to 1
2. 10 to 1
3. 50 to 1
4. 100 to 1

1-51. When taking forward and reverse resistance readings between a transistor's emitter and collector, what type of reading should you get?

1. Both the forward and reverse readings should be nearly the same
2. A short in both the forward and reverse directions
3. Less than 15 ohms when measuring in the forward direction and infinite in the reverse direction
4. Less than 15 ohms in the reverse direction and infinite in the forward direction

1-52. When using an ohmmeter to test transistors, you should avoid using R×1 range for which of the following reasons?

1. The R×1 range is not as accurate as the other ranges
2. Most ohmmeters do not produce sufficient voltage on the R×1 range to properly bias a transistor junction
3. Some ohmmeters produce in excess of 100 milliamps of current on the R×1 range and could possibly damage the transistor
4. The R×1 scale is not capable of measuring the high resistances that are typical of a PN junction when forward biased

1-53. When using a soldering iron to replace transistors, you must be sure there is no current leakage between the power source and the tip of the iron. Which of the following actions should you take if current leakage is detected?

1. Reduce the wattage of the heating element
2. Use an isolation transformer to power the soldering iron
3. Use a soldering gun instead of a soldering iron
4. Isolate the soldering iron from ground by disconnecting the soldering iron safety ground wire

1-54. Which of the following is a description of ESDS devices?

1. Components that are sensitive to electrostatic discharge
2. Components that are sensitive to the electromagnetic pulse produced by a nuclear detonation
3. State-of-the-art devices used to detect electronic emissions
4. Devices designed to withstand any type of electromagnetic or electrostatic interference

1-55. MOS and CMOS devices without input diode protection circuitry belong in which, if any, of the following ESDS device categories?

1. Sensitive devices
2. Very sensitive devices
3. Moderately sensitive devices
4. None of the above

1-56. Wearing a grounded wrist strap when repairing electronic circuit boards serves which of the following purposes?

1. It identifies you as being 2M qualified
2. It protects ESDS devices from damage
3. It protects the technician from electrical shock
4. It protects you from rf burns when working near radar antennas

1-57. What, if any, precaution should you take before you open a package that contains an ESDS device?

1. Rub the package against a dissimilar material
2. Discharge any static electricity by connecting a grounded lead to the package
3. Measure the static charge on the package with an oscilloscope to ensure that it is within tolerance
4. None

ASSIGNMENT 2

Textbook assignment: Chapter 2, "Component Testing," pages 2-8 through 2-48. Chapter 3, "Quantitative Measurements," pages 3-1 through 3-15.

2-1. Which of the following servicing techniques applies to semiconductors?

1. Substituting a semiconductor with a known good semiconductor is a simple way to test them
2. Voltage and resistance measurements are taken prior to substituting semiconductors
3. Substituting semiconductors is cumbersome if more than one is bad or if they are soldered into the circuit
4. All of the above

2-2. What minimum ratio of back-to-forward resistance should you expect when testing a diode?

1. 1 to 1
2. 10 to 1
3. 50 to 1
4. 100 to 1

2-3. Which of the following characteristics of a diode cannot be determined by using a multimeter?

1. How the diode reacts to various voltages
2. How the diode reacts to various frequencies
3. Both 1 and 2 above
4. How the diode reacts to forward and reverse dc biasing

2-4. How are SCRs normally used in the Navy?

1. As rectifiers
2. As power control devices
3. As voltage regulators
4. As switching diodes in digital applications

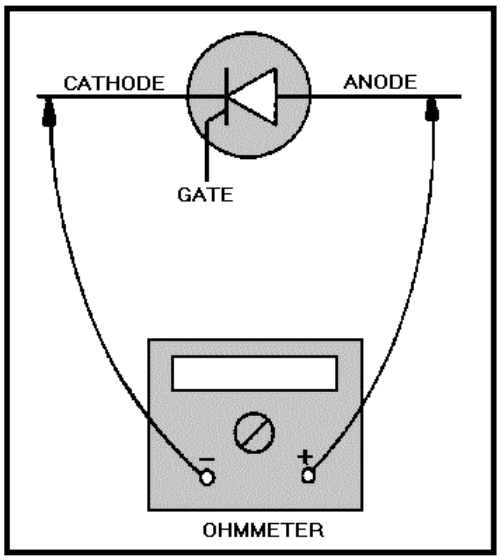

Figure 2A. —Testing an SCR with an ohmmeter.

IN ANSWERING QUESTIONS 2-5 AND 2-6, REFER TO FIGURE 2A. NOTE THAT THE CONNECTIONS OF THE OHMMETER ARE ALREADY MADE.

2-5. To forward bias an SCR, which elements should you short together?

1. The gate and anode
2. The cathode and anode
3. The cathode and gate
4. All three elements

2-6. What, if anything, will be the result of removing the short after it has been made?

1. Current flow from the cathode to the anode will stop
2. Current flow from the anode to the cathode will stop
3. Current can flow in either direction between the anode and cathode
4. Nothing

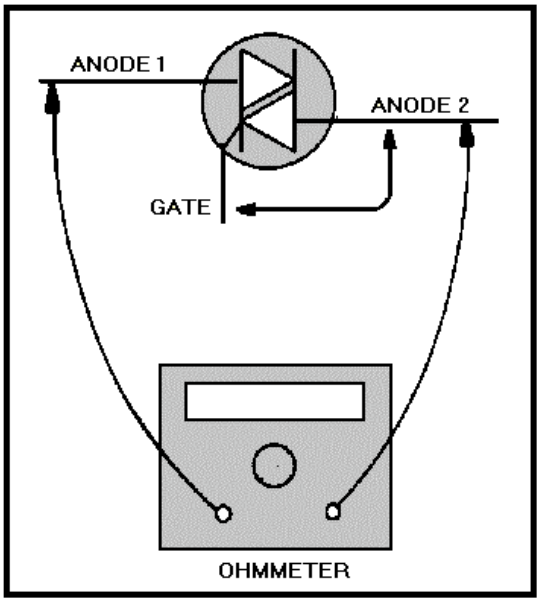

Figure 2B. —Testing a TRIAC with an ohmmeter.

IN ANSWERING QUESTION 2-7, REFER TO FIGURE 2B.

2-7. With a momentary short connected between the gate and anode 2, the TRIAC will be forward biased and allow current to flow between what elements?

1. From the gate to anode 1
2. From the gate to anode 2
3. From anode 1 to anode 2 only
4. In either direction between the two anodes

THIS SPACE LEFT BLANK INTENTIONALLY.

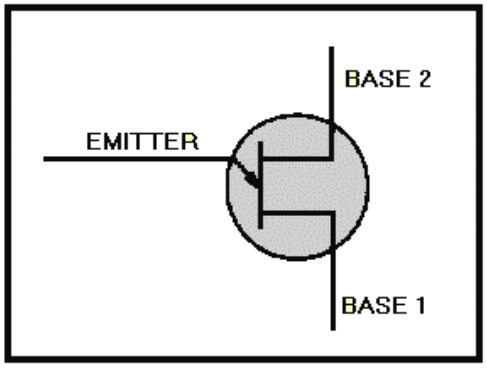

Figure 2C. —Unijunction transistor.

IN ANSWERING QUESTIONS 2-8 AND 2-9, REFER TO FIGURE 2C.

2-8. What readings should you expect to find when you measure the resistance between bases 1 and 2 of a UJT?

1. A short regardless of the polarity of the meter leads
2. A high resistance value regardless of the polarity of the meter leads
3. Approximately 15 ohms between base 1 and base 2 with the negative meter lead connected to base 1
4. Approximately 15 ohms between the two bases with the negative meter lead connected to base 2

2-9. For which, if any, of the following reasons do JFETs have circuit applications similar to those of vacuum tubes?

1. JFETs have a high input impedance and are voltage-responsive
2. JFETs have a low input impedance and a frequency response comparable to that of vacuum tubes
3. JFETs have a high input impedance and are current-responsive
4. None of the above

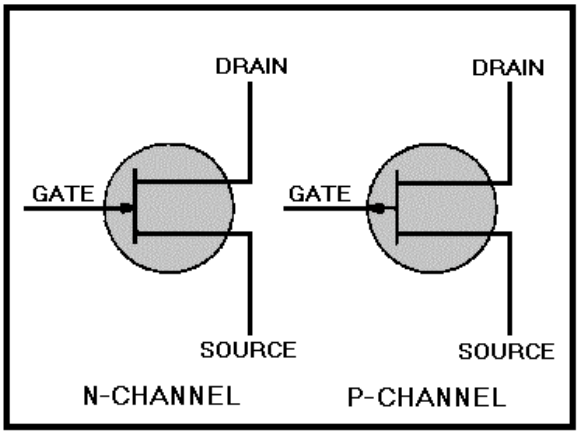

Figure 2D. —Junction FET.

IN ANSWERING QUESTION 2-10, REFER TO FIGURE 2E.

2-10. With the negative lead of an ohmmeter attached to the gate and the positive lead attached to the source, which of the JFETs in figure 2D would be good if the meter shows infinity?

1. P-channel
2. N-channel
3. Both 1 and 2 above
4. Neither 1 or 2

THIS SPACE LEFT BLANK INTENTIONALLY.

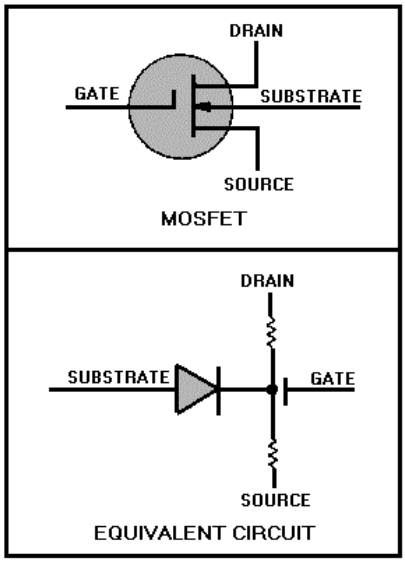

Figure 2E. —MOSFET (depletion/enhancement type) and equivalent circuit.

IN ANSWERING QUESTIONS 2-11 AND 2-12, REFER TO FIGURE 2E.

2-11. When measuring resistance between the drain and source of a depletion/enhancement type of MOSFET, what readings should you expect?

1. 15 ohms in one direction and infinity in the other direction
2. The same value of resistance in both directions
3. A short in one direction and infinity in the other
4. Infinite reading regardless of meter lead polarities

2-12. When measuring resistance between the gate, source, and drain of a depletion/enhancement type of MOSFET with the negative lead attached to the gate, what readings should you expect?

1. Both readings should be infinity
2. Both readings should be between 15 ohms and 100 ohms
3. Both readings should be approximately 1,000 ohms
4. Both readings should be less than 10 ohms

2-13. When unsoldering a MOSFET from a printed circuit board, you should avoid using a vacuum plunger solder sucker for which of the following reasons?

1. Solder suckers can generate high electrostatic charges that can damage MOSFETs
2. Solder suckers create a vacuum that can physically damage MOSFETs
3. Solder suckers are not authorized for any type of equipment repair
4. Solder suckers require the use of a high wattage soldering iron that may damage MOSFETs

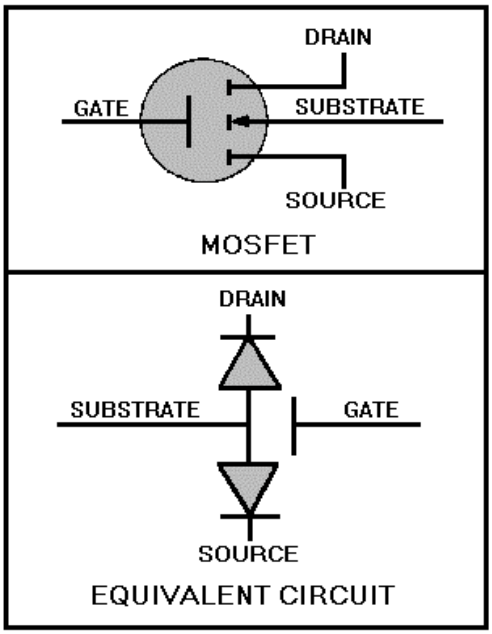

Figure 2F. —MOSFET (enhancement type) and equivalent circuit.

IN ANSWERING QUESTION 2-14, REFER TO FIGURE 2F.

2-14. When comparing resistance readings of an enhancement type of MOSFET to those of a depletion/enhancement type of MOSFET, which, if any, of the following differences should you notice?

1. The resistance between the substrate and the gate of the enhancement type should be less than 15 ohms
2. The measurement between the drain and source of the enhancement type should read infinite regardless of meter lead polarity
3. The resistances between the gate and the drain and between the gate and the source of the enhancement type should be noticeably higher
4. None of the above

2-15. Which of the following is/are (an) advantage(s) of integrated circuits when compared to circuits made up of separate components and interconnections?

1. Lower power consumption
2. Smaller size of the equipment
3. Lower equipment cost
4. All of the above

2-16. Which of the following is a characteristic of linear ICs?

1. They do not require regulated power supplies
2. They are typically sensitive to their supply voltages
3. They are never classed as electrostatic discharge sensitive devices
4. They are comparable in size to their equivalent transistor circuits

2-17. For which of the following reasons would you classify an IC as a "black box" device?

1. Because ICs are always black in color
2. Because all you can check are the inputs and outputs, not the internal operation of ICs
3. Because printed circuit boards that contain ICs cannot be repaired
4. Because ICs are designed to be repairable components

2-18. Test equipment used to detect the logic state of a digital IC should have which of the following characteristics?

1. A capability of measuring rms voltages
2. A frequency response in excess of 40 GHz
3. A high input impedance
4. A low input impedance

2-19. Which of the following statements describes) the use of logic clips?

1. Logic clips are designed to monitor the input and output of an IC simultaneously
2. Logic clips can only be used to test an IC that is out of the circuit
3. Logic clips can only be used with flat pack ICs
4. All of the above

2-20. For which of the following purposes are logic comparators used?

1. To test linear ICs
2. To compare different types of ICs
3. To inject pulse trains into digital ICs
4. For in-circuit testing of digital ICs by comparing them with reference ICs

2-21. Which of the following is an advantage of using a logic probe instead of an oscilloscope to test a digital IC?

1. Logic probes are usually larger than an oscilloscope but much lighter
2. Logic probes have a low input impedance
3. Logic probes are battery powered and do not react to line voltage variations
4. Logic probes are capable of detecting short-duration pulses that most oscilloscopes cannot display

2-22. For which of the following purposes are logic pulsers used?

1. To detect the logic state of digital ICs
2. To detect the logic state of linear ICs
3. To inject a pulse or pulse train into a logic circuit
4. To inject a 1-kHz sine wave into a circuit for signal tracing

2-23. Which of the following is a typical application for a logic analyzer?

1. To program EPROMs
2. To test individual logic ICs
3. To analyze the spectral purity at the output of a logic IC
4. To perform timing analysis by monitoring and comparing more than one timing signal simultaneously

2-24. Which of the following instruments is used to test the specific gravity of a lead-acid battery's electrolyte?

1. Hydrometer
2. Hygrometer
3. Electrometer
4. Gravitometer

2-25. Smoking is prohibited in the vicinity of lead-acid storage batteries for which of the following reasons?

1. Cigarette smoke neutralizes the electrolyte
2. Lead-acid batteries produce explosive hydrogen when they are being charged
3. Fumes produced by a lead-acid battery mixed with cigarette smoke produce a toxic by-product
4. All of the above

2-26. When testing dry cell batteries, which of the following procedures should you follow?

1. The battery should be tested under load conditions
2. The battery should not be tested under load conditions
3. The battery should be tested at various temperatures
4. Both 2 and 3 above

2-27. Which of the following dry cell batteries is rechargeable?

1. NICAD
2. Alkaline
3. Carbon-zinc
4. Mercury cells

2-28. Which of the following is the correct maximum charge rate for a NICAD battery rated at 300 milliampere hours?

1. 300 milliamperes for 15 hours
2. 60 milliamperes for 15 hours
3. 30 milliamperes for 15 hours
4. 600 milliamperes for 15 hours

2-29. Which of the following is a characteristic of fixed rf attenuators?

1. They are used to match impedances
2. They are designed to handle small amounts of rf power
3. They are usually built into the equipment in which they are used
4. They are capable of handling several kilowatts of power

2-30. Which of the following is an easy method of performing an operational test on a decade resistor?

1. Use an swr meter
2. Use the resistance substitution method
3. Read the resistance with an ohmmeter
4. Apply an rf voltage across the decade, measuring the voltage drop and computing the resistance

2-31. Which of the following is/are the disadvantages of glass-core, fiber-optic cables?

1. They are smaller in diameter than plastic-core fibers
2. They are extremely susceptible to mechanical damage
3. They exhibit signal losses as high as 25 dB/km
4. Both 2 and 3 above

2-32. Which of the following types of test equipment should you use to measure the losses in a fiber optic cable if only one end of the cable is accessible?

1. An optical ohmmeter
2. A Wheatstone bridge
3. An optical power meter
4. An optical time-domain reflectometer

2-33. When using the AN/USM-465 portable service processor, which of the following procedures is possible?

1. Identifying faulty components on digital printed circuit boards
2. Troubleshooting its own printed circuit boards
3. When using the guided probe, it will tell you if you have placed the probe on the wrong test point
4. All of the above

2-34. Which of the following measurements add resistance and inductive and capacitive reactance?

1. Q
2. Resonance
3. Impedance
4. Figure of merit

2-35. Bridge circuits are used in the measurement of impedance for which of the following reasons?

1. Bridges are one of the most accurate devices for measuring impedance
2. Bridges are only slightly less accurate than vtvm's when measuring impedance
3. Bridges are useful in measuring frequency
4. Both 2 and 3 above

2-36. Bridge circuits typically contain which of the following sections?

1. A measuring circuit and comparing circuit
2. A detector circuit
3. A power circuit
4. All of the above

2-37. When approximate values for resistance, capacitance, or inductance to be measured by a bridge are unknown, which, if any, of the following actions should you take?

1. Connect two bridges in parallel to make the measurement
2. Assign a temporary value to the component and set up the bridge accordingly
3. Place an adjustable shunt across the meter terminals
4. None of the above

2-38. The most serious errors affecting the accuracy of bridge measurements can be attributed to which of the following problems?

1. The capacitive and inductive characteristics of the connecting leads
2. The resistance of the test leads
3. D'Arsonval meter movements used as detectors
4. Improper selection of meter shunts

2-39. Which of the following considerations should be given when applying external excitation to a bridge circuit?

1. The voltage applied should equal the maximum voltage rating of the component under test
2. The higher the voltage, the more accurate the measurement
3. Apply only enough voltage to obtain a reliable indicator deflection
4. External excitation should be limited to 115 v 60 Hz

2-40. It is difficult to measure resistances less than 1 ohm with a bridge because of which of the following factors?

1. Contact resistance is present between the resistor being measured and the binding posts of the bridge
2. Excessive supply voltage is required to excite the galvanometer
3. The frequency of the excitation source creates excessive skin currents in the resistor under test
4. The excitation voltage causes low-value resistors to heat excessively

2-41. What type of bridge is recommended for measuring resistances less than 1 ohm?

1. Wheatstone bridge
2. Schering bridge
3. Maxwell bridge
4. Kelvin bridge

2-42. When using resistance-ratio bridges to measure capacitance, inductance, or resistance, you should compare the unknown component with which of the following components?

1. A capacitor
2. An inductor
3. A resistor
4. A similar standard

2-43. A Hay bridge measures unknown inductances by comparing them with which, if any, of the following components?

1. A standard inductor
2. A standard resistor
3. A standard capacitor
4. None of the above

2-44. What is the advantage of using a Maxwell bridge over a Hay bridge?

1. The Maxwell bridge can measure greater range of inductances
2. The Maxwell bridge can measure much smaller resistances
3. The Maxwell bridge can provide a greater accuracy over a smaller range
4. The Maxwell bridge can measure inductances having a high Q

2-45. Which of the following pieces of test equipment measure(s) the magnitude and phase angle of an unknown impedance?

1. The vector bridge
2. The impedance-angle meter
3. Both 1 and 2 above
4. The Hay bridge

2-46. Maximum transfer of rf energy between transmitter/receiver and antenna will occur under which of the following circumstances?

1. When the transmitter or receiver is properly matched to the antenna
2. When the receiver is tuned one sideband above the transmitter
3. When the transmitter is tuned one sideband above the receiver
4. Both 2 and 3 above

2-47. Rf impedance bridge measurements require the use of which of the following pieces of equipment?

1. An ac power source, a detector, and a Wheatstone bridge
2. An rf signal generator, an oscilloscope, and a power supply
3. An rf signal generator, an rf bridge, and a detector
4. A Schering bridge, a detector, and an rf power supply

2-48. What unit of measure is used to express the power level of a complex voice signal?

1. Vu
2. dB
3. dBm
4. Watt

2-49. The function of a dB meter is described in which of the following descriptions?

1. A current-measuring device
2. A user-calibrated constant current device
3. An electronic voltmeter calibrated in terms of dB
4. A frequency selective voltmeter calibrated in terms of true power

2-50. Electrodynamic wattmeters are used to measure which of the following types of power?

1. Ac power
2. Dc power
3. Both 1 and 2 above
4. Shf power in the 2-32 GHz frequency range

2-51. An electrodynamic wattmeter can be converted into an instrument for measuring reactive power by which of the following methods?

1. Installing a capacitor in series with the input
2. Shunting the meter movement with a 0. 1 ufd capacitor
3. Replacing the resistor which is normally in series with the voltage coil with a large inductance
4. Shunting the input terminals with an LC network adjusted to the resonant frequency of the signal being measured

2-52. What precaution(s), if any, must be taken when checking components with the Huntron Tracker 2000?

1. Voltages must not exceed 5 V dc
2. Voltages must not exceed 5 V ac
3. Device to be tested must have all power turned off and capacitors discharged
4. None of the above

2-53. When you are testing components by comparison, what is the most common mode used on the Huntron Tracker?

1. Automatic
2. Pulse generator
3. Single sweep
4. Alternate

2-54. Why is it necessary to electrically isolate a component while testing individual components with the Huntron Tracker 2000?

1. A resistor in series may give you an inaccurate signature
2. A diode in series may give you an inaccurate signature
3. A resistor in parallel may give you an inaccurate signature
4. All of the above

ASSIGNMENT 3

Textbook assignment: Chapter 3, "Quantitative Measurement," pages 3-26 through 3-39. Chapter 4, "Qualitative Measurements," pages 4-1 through 4-14. Chapter 5, "Introduction to Waveform Interpretation," pages 5-1 through 5-35.

3-1. The AN/URM-120 in-line wattmeter is capable of measuring which of the following values?

1. Rf levels up to 500 watts between 30 MHz and 1,000 MHz
2. Rf levels up to 1 kW between 2 MHz and 30 MHz
3. Both 1 and 2 above
4. Af levels up to 500 watts between 1 kHz and 15 kHz

3-2. When rf power is applied to a bolometer, the heat generated by the semiconductor bead results in which of the following characteristic changes?

1. A capacitive change
2. An inductive change
3. A resistive change
4. A frequency change

3-3. The Hewlett-Packard 431 C power meter is capable of measuring power within which of the following frequency ranges in a coaxial system?

1. 1 MHz to 9 MHz
2. 10 MHz to 18 GHz
3. 41 GHz to 100 GHz
4. 101 GHz to 1,000 GHz

3-4. Calorimeters measure power by converting the input electromagnetic energy into which of the following forms?

1. Heat
2. Dc power
3. Pulsed rf energy
4. Electrodynamic energy

3-5. Which of the following relationships exist(s) between the temperature increase of the calorimetric body of a static calorimeter and the applied power?

1. The temperature increase is proportional to the frequency of the applied power
2. The temperature increase is inversely proportional to the amount of applied power
3. The temperature increase is directly proportional to the time of the applied power
4. Both 2 and 3 above

3-6. Which of the following statements describe(s) the method of using a twin calorimeter?

1. Rf power is applied to one calorimetric body and the other body acts as a temperature reference
2. The steady-state temperature difference between the two calorimetric bodies is used as a measure of rf power
3. Both 1 and 2 above
4. Power is applied to both calorimetric bodies through a directional coupler

3-7. Flow calorimeters are classified by the type of measurement performed, the type of heating used, and what other characteristic?

1. Number of calorimetric bodies
2. Type of circulation method used
3. Type of rf loads that they employ
4. Number of calorimetric fluids used

3-8. When performing measurements above 1 GHz in a flow calorimeter, which of the following dielectrics do you normally use?

1. Water
2. Oil
3. MEK
4. H_2SO_4

3-9. Which of the following government agencies is/are responsible for maintaining our primary?

1. U. S. National Bureau of Standards
2. U. S. Naval Observatory
3. Department of Weights and Measures
4. All of the above

3-10. When using a stroboscope to measure an unknown frequency, which, if any, of the following steps should you take?

1. Start the measurement at the lowest frequency that the stroboscope can deliver and increase the flashing rate until a single image is obtained
2. Start the measurement at the highest frequency that the stroboscope can deliver and reduce the flashing rate until a single stationary image is obtained
3. Start the measurement at the midscale range of the stroboscope and adjust the flashing rate, in either direction, until a harmonic of the primary frequency is obtained
4. None of the above

THIS SPACE LEFT BLANK INTENTIONALLY.

3-11. If you anticipate using a stroboscope over an extended period of time, which of the following actions can you take to extend flasher-tube life?

1. Operate the stroboscope at a submultiple of the fundamental synchronous speed
2. Lower the plate voltage of the flasher tube
3. Lower the filament voltage of the flasher tube
4. Operate the stroboscope at a multiple of the fundamental synchronous speed

3-12. Vibrating reed meters and moving disk meters are primarily used to measure which of the following values?

1. The frequency of 60-Hz ac power
2. The rotational speed of synchronous motors
3. Frequencies between 1 kHz and 10 MHz
4. The frequencies of multiplexed signals

3-13. When using an oscilloscope to measure frequencies, which of the following formulas should you use?

1. $f = \frac{1}{t}$
2. $f = t$
3. $f = \frac{t}{1}$
4. $f = (N_x) \cdot \frac{AB}{A - B}$

3-14. Most oscilloscopes are limited in their frequency-measuring capability to which of the following upper frequency limits?

1. 50 kHz
2. 100 kHz
3. 500 kHz
4. 100 MHz

3-15. Which of the following indications should you observe when a frequency meter is adjusted to the resonant frequency of the signal under test?

1. An audible beat-frequency signal
2. A pronounced dip in output at resonance
3. A pronounced increase in output power
4. A bright glow of the frequency meter glow lamp

3-16. What is the purpose of the time interval measurement of a frequency counter?

1. It indicates the wave period
2. It indicates the time between two events
3. It indicates the time between two functions of an event
4. Both 2 and 3 above

3-17. What are the three basic categories of wavemeters?

1. Resonant, active, and passive
2. Absorption, active, and passive
3. Reaction, resonant, and absorption
4. Absorption, reaction, and transmission

3-18. In becoming a qualified technician, which of the following goals should you seek to achieve?

1. To be able to repair a specific piece of equipment
2. To be able to isolate faults in an entire system
3. To demonstrate a basic knowledge of system interconnections
4. To demonstrate minimum maintenance ability on a piece of equipment

3-19. When attempting to correct a technical problem, which of the following procedures should you follow?

1. Use short cuts
2. Do random testing
3. Use a logical approach
4. Do a self-test of the equipment

3-20. Efficient operation of equipment is assured by which of the following actions?

1. Using tricks of the trade
2. Making quick repairs when problems occur
3. Observing system quality figures during preventive maintenance
4. Monitoring all system test points continuously

3-21. The standing-wave ratio (swr) in a transmission line is figured by using which of the following ratios?

1. Maximum voltage to maximum current
2. Maximum voltage to minimum voltage
3. Maximum current to maximum voltage
4. Minimum voltage to minimum current

3-22. Swr measurements are taken for which of the following purposes?

1. To determine the output frequency of the system under test
2. To determine the matching quality of the transmission line termination
3. To determine the coupling quality of the transmission line
4. To determine system output power

3-23. Couplers containing slots are used with rf probes to provide access to which of the following components?

1. Wavemeters
2. Unidirectional couplers
3. Open transmission lines
4. Waveguides

3-24. The wavelength of a standing wave is measured on a short-circuited, terminated line using a magnetic or electric probe in which of the following ways?

1. By multiplying the average current by the peak current
2. By dividing the average voltage by the peak voltage
3. By measuring the distance between a maximum voltage point and a maximum current point
4. By measuring the distance between alternate maximum or minimum current points along the line

3-25. A neon lamp moved parallel to a two-wire parallel transmission line will glow at its brightest at which of the following points?

1. Maximum current points
2. Maximum voltage points
3. Maximum voltage and current points
4. Maximum and minimum current points

3-26. A milliammeter moved parallel to a two-wire transmission line will show its highest indication at which of the following points?

1. Maximum voltage points
2. Maximum current points
3. Maximum current and voltage points
4. Maximum and minimum voltage points

3-27. Which of the following devices may be used to measure swr without measuring the standing wave?

1. Bridge
2. Rf probe
3. Neon lamps
4. Milliammeter

3-28. When using an RC bridge to measure swr, which of the following factor(s) must you consider as the applied frequency increases?

1. Skin effect
2. Stray inductance
3. Stray capacitance
4. All of the above

3-29. Before a newly constructed bridge can be calibrated, adjustments must be made for which of the following reasons?

1. To determine the frequency range of the bridge
2. To keep stray effects at a minimum
3. To adjust the rf voltage amplitude
4. To determine the characteristic impedance of the circuit

3-30. Which of the following formulas apply(ies) when measuring swr with a bridge?

1. $$Swr = \frac{R_L}{R_O}$$

2. $$Swr = \frac{R_O}{R_L}$$

3. Both 1 and 2 above--use the one that yields an swr ratio greater than 1 to 1

4. $$Swr = \frac{R_O \times R_L}{R_O + R_L}$$

3-31. The ideal impedance match between transmitter and load is

1. 1 to 1
2. 2 to 1
3. 3 to 1
4. 4 to 1

3-32. When comparing vswr and iswr, which, if any, of the following is the correct ratio?

1. Vswr will exceed iswr by a minimum of 100%
2. Vswr will exceed iswr by a minimum of 50%
3. Vswr and iswr ratios will be equal
4. None of the above

3-33. Electrical losses caused by transmission line deterioration are best measured using which of the following pieces of equipment?

1. A signal generator and a power meter
2. A signal generator and a frequency counter
3. An swr meter and an oscilloscope
4. A frequency counter and a power meter

3-34. If a 9.5 GHz, 20 watt signal is inserted into a transmission line, approximately what signal should be measured at the other end of the transmission line?

1. 5 GHz, 10 watts
2. 5 GHz, 20 watts
3. 0 GHz, 10 watts
4. 0 GHz, 20 watts

3-35. To accurately determine transmission line losses, you should perform insertion losses at which of the following frequencies?

1. Midrange of the transmission line's frequency spectrum
2. At the upper and lower entrances of the transmission line's frequency spectrum
3. Across the entire frequency spectrum of the transmission line
4. Midrange of the transmission line's frequency spectrum, plus and minus 10 kHz

3-36. Which of the following transmission line specifications is/are considered important?

1. Frequency
2. Characteristic impedance
3. Power-handling capabilities
4. All of the above

3-37. Mixing two or more frequencies across a nonlinear device produces which of the following signals?

1. Crosstalk
2. Intermodulation distortion
3. Single sideband (ssb) transmission
4. Undesirable carrier frequency deviation

3-38. Which of the following statements describes cross modulation?

1. Degenerative feedback that causes a circuit to oscillate
2. Overmodulation that produces an echo
3. The signal from one channel that modulates the signal on an adjacent channel
4. Oscillation that is caused by system misalignment

3-39. Distortion caused by excessive regenerative feedback is called

1. echo
2. crosstalk
3. detected distortion
4. parasitic generation

3-40. When using a two-tone test to detect intermodulation distortion, what is the ideal indication you should see on a spectrum analyzer?

1. An exact reproduction of the input frequencies
2. The sum and difference of the input frequencies
3. A single frequency with the amplitude equal to the sum of the input frequencies
4. The beat frequency of the two inputs

3-41. Which of the following actions minimizes the effects of intermodulation distortion?

1. Using proper antenna spacing
2. Shielding components and circuitry
3. Using parasitic suppression circuits
4. All of the above

3-42. At what point does an amplitude-modulated signal begin to produce distortion?

1. Below 50% modulation
2. At 65% modulation
3. At 95% modulation
4. Above 100% modulation

3-43. To obtain 100% amplitude modulation of an rf carrier with a sine wave, the modulating power must equal what minimum percent of the rf carrier power?

1. 10%
2. 15%
3. 25%
4. 50%

3-44. The damping of a meter movement that is being used to measure modulation has which of the following disadvantages?

1. The frequency response of the meter is reduced
2. The accuracy of the meter movement is reduced
3. An average reading does not disclose transient overmodulation
4. The amount of current required to drive the meter is reduced

3-45. Which of the following modulation patterns can be observed on an oscilloscope?

1. Wave-envelope and trapezoidal
2. Lissajous and wave-envelope
3. Time division and frequency division
4. Lissajous and trapezoidal

3-46. The frequency response of most oscilloscopes limits the capability of measuring percentage of modulation to which of the following frequency bands?

1. Lf and hf
2. Slf and shf
3. Uhf
4. Vhf

3-47. When using the two-tone test (trapezoidal method) to check a transmitter, you should see what pattern on the oscilloscope?

1. A series of fully modulated sine waves
2. A 100% amplitude-modulated signal
3. Two pulses of equal amplitude and duration
4. Two opposing triangles that are mirror images of each other

3-48. Frequency deviation of an fm signal is usually expressed in which of the following units of measurements?

1. Kilohertz
2. dB
3. dBm
4. Volts

3-49. What limits an fm transmitter's maximum frequency deviation?

1. The width of the band assigned for station operation
2. The maximum power output rating of the transmitter
3. The distortion that occurs at 100% modulation
4. The transmitting antenna height

3-50. Spectrum analysis is a graphic plot of

1. amplitude versus time
2. time versus frequency
3. amplitude versus frequency
4. amplitude versus power

3-51. Time-domain plots are used by technicians to graphically view which of the following waveform parameters?

1. Amplitude versus time
2. Frequency versus time
3. Frequency versus distance
4. Amplitude versus power

3-52. Frequency-domain plots are used by technicians to graphically view which of the following waveform parameters?

1. Amplitude versus time
2. Amplitude versus frequency
3. Frequency versus distance
4. Amplitude versus power

3-53. Which of the following pieces of test equipment should you use to determine what signals make up a complex signal?

1. Oscilloscope
2. Sweep oscillator
3. Spectrum analyzer
4. Time-domain reflectometer

3-54. At 100% amplitude modulation, the total power in the sidebands equals what percentage of the carrier power?

1. 6%
2. 50%
3. 66%
4. 100%

3-55. When viewing a 100% amplitude-modulated signal with a spectrum analyzer, what type of display should you observe?

1. A center frequency and both the upper and lower sidebands 6 dB down from the center frequency
2. A center frequency and both the upper and lower sidebands of equal amplitude
3. A center frequency that is -6 dB down from both the upper and lower sidebands
4. A suppressed carrier with both the upper and lower sidebands of equal amplitude

3-56. Which of the following is/are an advantage of ssb transmission?

1. The voice quality of ssb transmissions is superior to both AM and fm transmissions
2. Ssb transmissions are not susceptible to interference caused by sun spots and atmospherics
3. Ssb requires one-sixth of the output power and less than half the bandwidth required by AM to transmit the same amount of intelligence power
4. All of the above

3-57. In fm, the AMOUNT of frequency deviation (shift) is proportional to

1. the frequency of the carrier
2. the amplitude of the modulating signal
3. the frequency of the modulating signal
4. the plate current of the transmitter's linear amplifier

3-58. In fm, the RATE of frequency deviation (shift) is proportional to

1. the impedance of the antenna
2. the power output of the transmitter
3. the amplitude of the modulating signal
4. the frequency of the modulating signal

3-59. When analyzing the composition of a rectangular wave with a spectrum analyzer, which of the following types of displays will you see?

1. A fundamental frequency and its odd harmonics only
2. A fundamental frequency and its even harmonics only
3. A fundamental frequency and its combined even and odd harmonics
4. An infinite number of fundamental frequencies

3-60. The ability of a spectrum analyzer to resolve signals refers to its ability to

1. distinguish one signal from other signals
2. shape signals through the use of filters
3. determine a receiver's minimum discernible signal
4. measure the frequency of a signal

3-61. The ability of a spectrum analyzer to resolve signals is limited by which of the following factors?

1. The amplitude of the signal under test
2. The narrowest bandwith of the spectrum analyzer
3. The upper frequency limits of the spectrum analyzer
4. The lower frequency limits of the spectrum analyzer

3-62. Which of the following characteristics of a transmission line fault can be observed using time-domain reflectometry?

1. Nature of the fault
2. Distance to the fault
3. Both 1 and 2 above
4. Figure of merit of the fault

3-63. What is the primary application of swept-frequency testing?

1. To determine the broadband frequency response of a device
2. To determine the characteristics of a device at a specific frequency
3. To determine the impedance of a transmission line
4. To determine the swr of a transmission line

3-64. You should perform an initial power check on a transmitting antenna before sweeping the antenna for which of the following reasons?

1. To prevent damage to the test equipment
2. To ensure the transmitter is deenergized
3. To ensure the transmitter is energized
4. To ensure the transmitter is keyed