RC, RL, RCL FORMULAE & CIRCUITS

USAOMMCS X – 14319 Revised Jan 2002

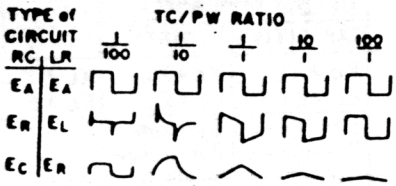

TC/PW Ratio

SHORT: EQUAL TO OR LESS THAN 1/10

MEDIUM: FROM 1/10 TO 10/1 (NOT USED)

LONG: EQUAL TO OR GREATER THAN 10/1

$TC = RC$ | $TC = \frac{L}{R}$ | $PW = \frac{1}{2f}$ For a symmetrical square wave

DIFFERENTIATOR A CIRCUIT THAT CHANGES A SQUARE WAVE INTO A PEAKED WAVE.

INTEGRATOR A CIRCUIT THAT CHANGES A SQUARE WAVE INTO A triangle wave.

COUPLER OUTPUT WAVE FORM IS IDENTICAL TO INPUT WAVE FORM.

PULSE WIDTH THE DURATION OF A PULSE EXPRESSED IN TIME. THE TIME BETWEEN THE LEADING EDGE AND THE TRAILING EDGE

TRANSIENT A TRANSIENT IS A CHANGING VOLTAGE OR CURRENT FROM ONE STEADY STATE TO ANOTHER. THE TERM TRANSIENT HAS BEEN EXPANDED TO INCLUDE ANY NONSINUSOIDAL VOLTAGE.

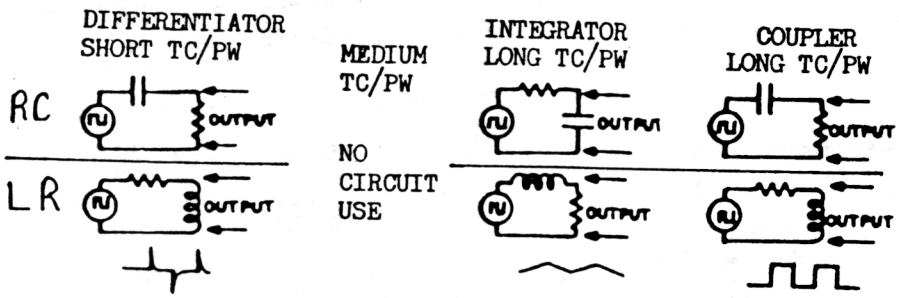

COUPLER CIRCUIT OUTPUT WAVE SHAPE IS IDENTICAL TO THE INPUT WAVE SHAPE THEREFORE THE TC IS VERY LONG.

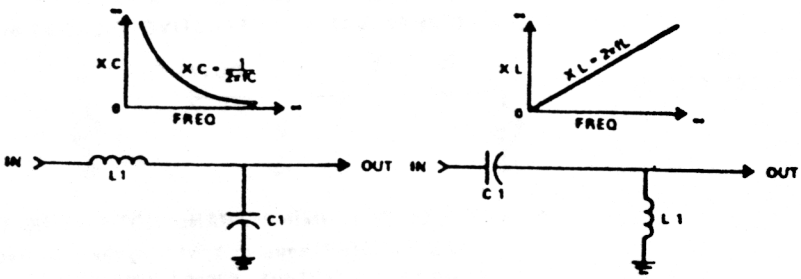

LOW PASS FILTER HIGH PASS FILTER

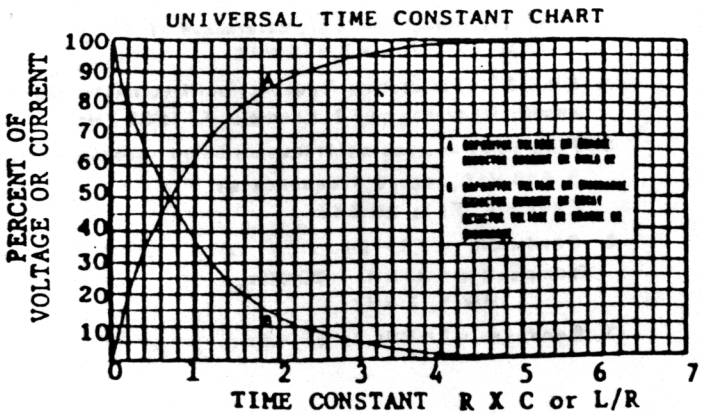

PERCENT VOLTAGE

TC	Chg	Disch
1	63.2	36.8
2	86.5	13.5
3	95	5.0
4	98	2.0
5	99	1.0

RC, RL, RCL FORMULAE & CIRCUITS

USAOMMCS X – 14319 Revised Jan 2002

SERIES RESONANCE BAND

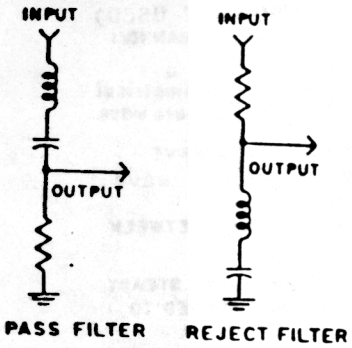

	BELOW f_r	AT f_r	ABOVE f_r
	CAPACITIVE	RESISTIVE	INDUCTIVE
SERIES	$X_C > X_L$ $E_C > E_L$	$X_C = X_L$ $E_C = E_L$	$X_L > X_C$ $E_L > E_C$
	I decrease Z increase	I maximum Z minimum	I decrease Z increase
PARALLEL	$X_C > X_L$ $I_L > I_C$	$X_C = X_L$ $I_C = I_L$	$X_L > X_C$ $I_C > I_L$
	I increase Z decrease	I minimum Z maximum	I increase Z decrease
	INDUCTIVE	RESISTIVE	CAPACITIVE

VOLTAGE/CURRENT RELATIONSHIP

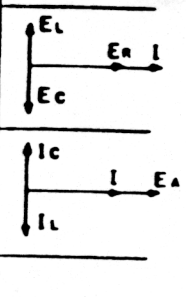

PARALLEL RESONANCE BAND

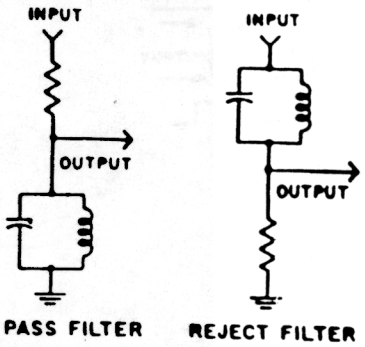

BANDWIDTH-QUALITY BAND PASS CIRCUITS

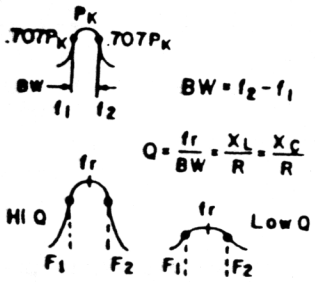

$BW = f_2 - f_1$

$Q = \frac{f_r}{BW} = \frac{X_L}{R} = \frac{X_C}{R}$

RESONANCE

$f_r = \frac{1}{2\pi\sqrt{LC}} = \frac{.159}{\sqrt{LC}}$

$X_L = 2\pi f_L$

$X_C = \frac{1}{2\pi f_C}$

$I = \frac{E_C}{X_C}$

$I = \frac{E_A}{Z}$

$Z = \sqrt{R^2 + (X_L - X_C)^2}$

$Z = \frac{E_A}{I_T}$

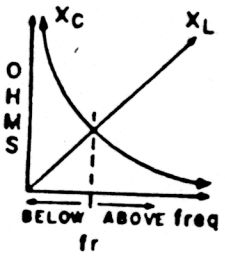

EFFECTIVE VALUE = PEAK TO PEAK VALUE x 0.707 ÷ 2

PEAK TO PEAK VALUE = EFFECTIVE VALUE X 1.414 x 2

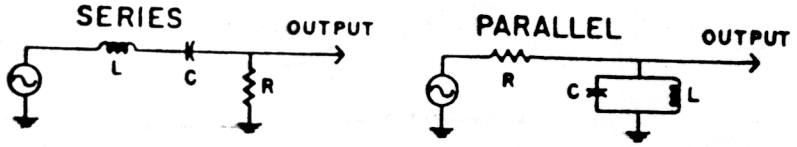

EXAMPLE OF DETERMINING BANDWIDTH USING TEST EQUIPMENT

1. Find Resonance Frequency by varying the input frequency so that the output voltage (circuits above) is maximum.
2. Record Resonance Frequency and the voltage at resonant. Example: Assume a maximum voltage of 5 VAC at a frequency of 25 KHz.
3. Bandpass voltage points are determined at .707 of maximum voltage. Example: 5 x .707 = 3.535 VAC
4. Find F2 by increasing frequency until voltmeter reads 3.535 VAC, record frequency as F2. Example: F2 is 33 KHz
5. Find F1 by decreasing frequency below resonance until voltmeter reads 3.535 VAC, record frequency as F1. Example: F1 is 20 KHz
6. Bandwidth = F2 – F1. Example: BW = 33 KHz – 20 KHz, BW = 13 KHz
7. Bandpass = 20 KHz to 33 KHz